484883 - 00

Demeyere GROUP

- FR — NOTICE DE MONTAGE
- EN — ASSEMBLY INSTRUCTIONS
- DE — MONTAGEANLEITUNG
- ES — INSTRUCCIONES DE MONTAJE
- NL — MONTAGEVOORSCHRIFT
- IT — ISTRUZIONI DI MONTAGGIO
- PT — INSTRUÇÕES DE MONTAGEM
- PL — INSTRUKCJA MONTAŻU
- CR — NAPUTCI ZA MONTAŽU

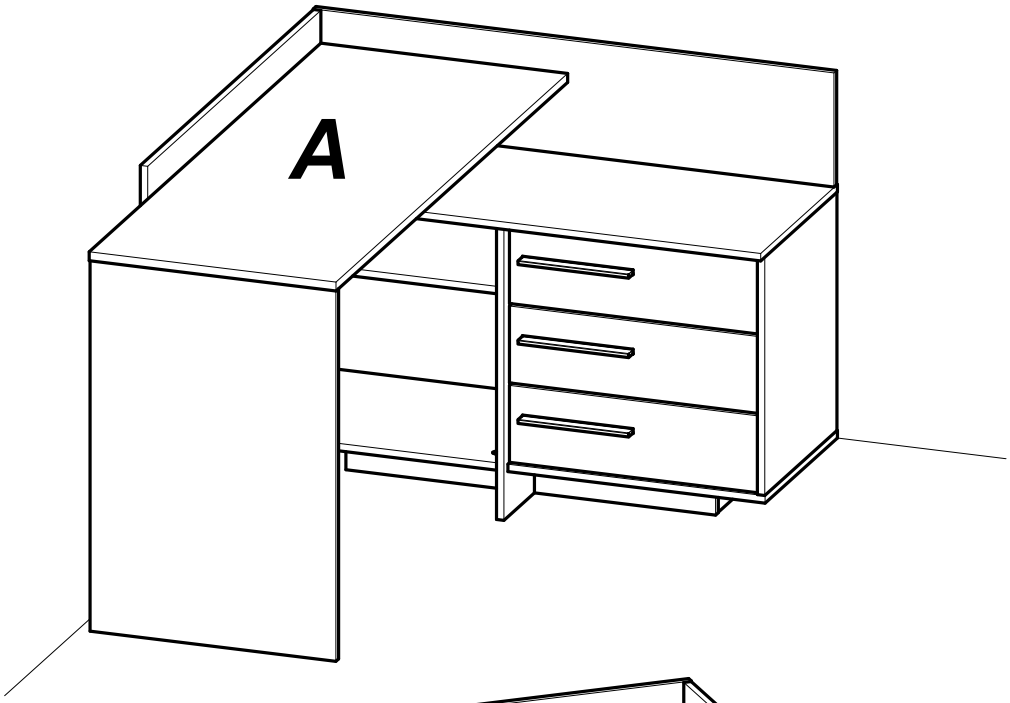

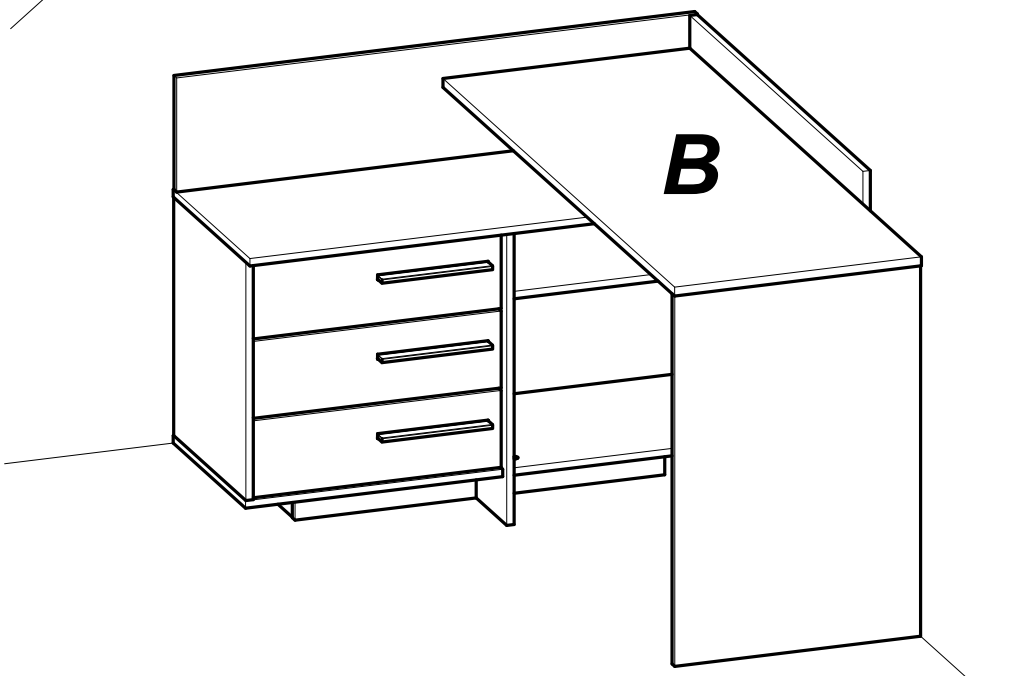

en utilisant le matériel recommandé - using the recommended tools

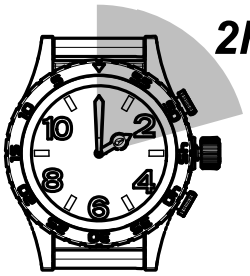

* informations non contractuelles - non-contractual information

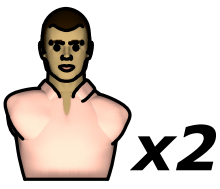

NE RETOURNEZ PAS AU MAGASIN
Besoin d'aide? Composez-le 1-844-862-5472
LIGNE SANS FRAIS (disponible uniquement USA/CANADA)

DO NOT RETURN TO STORE
Need help? Call 1-844-862-5472
TOLL FREE NUMBER (only available for customers in North America)

133246

Fabriqué en France
Made in France

S.A. Meubles DEMEYERE - 178-184 rue de la Prévôté
59840 Pérenchies - FRANCE

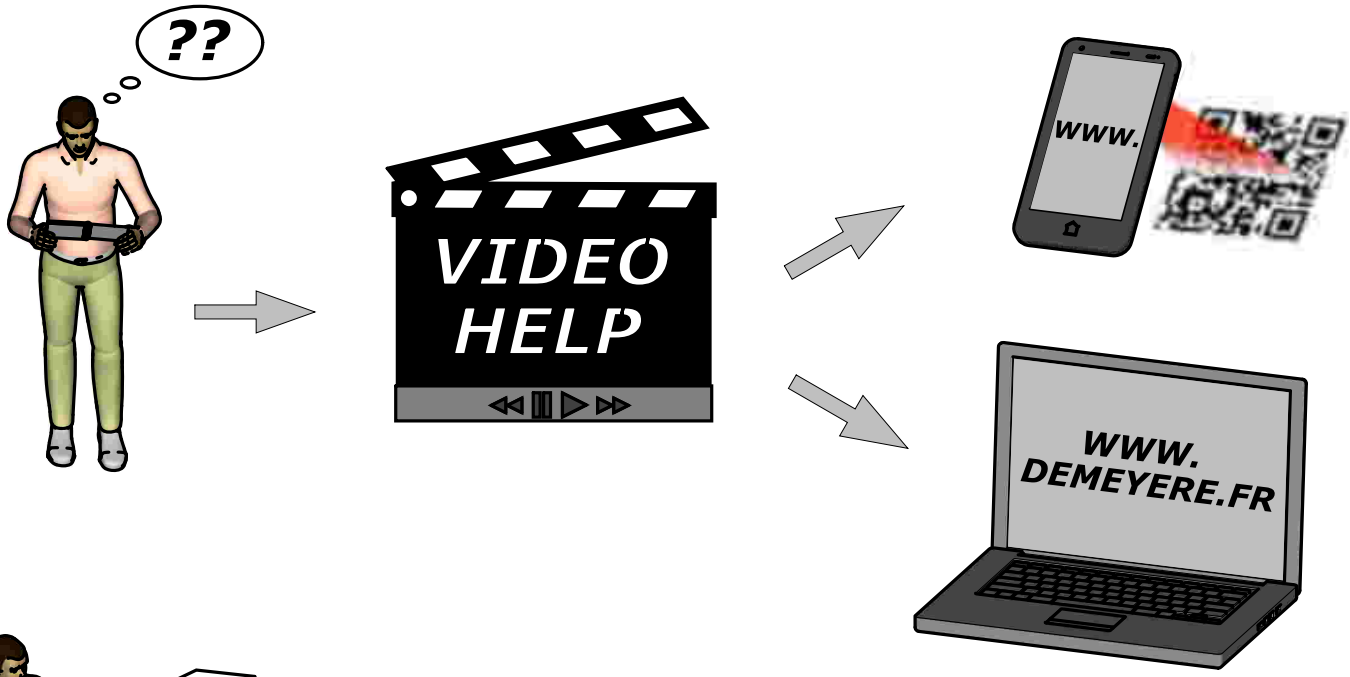
??
VIDEO
HELP
www.
WWW.
DEMEYERE.FR

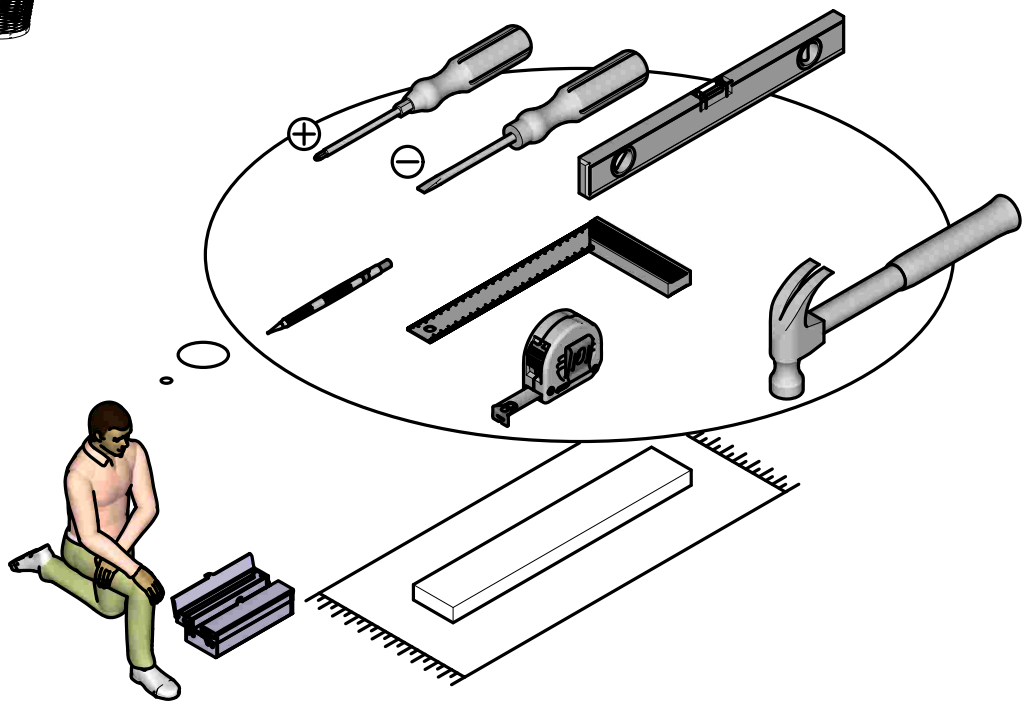

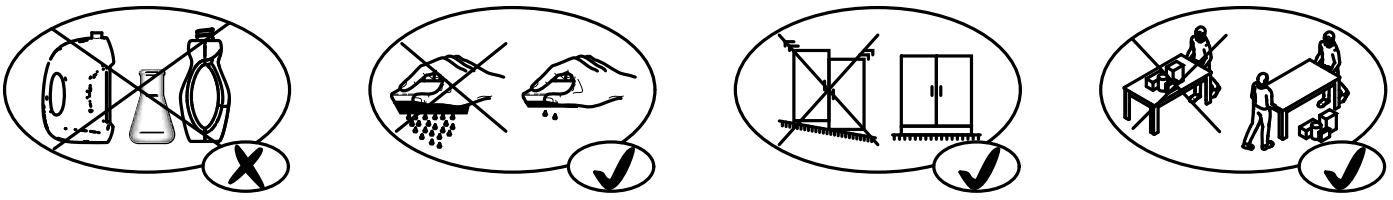

A x22

B x24

Ø15mm
Ø19/32"

C x4

Ø5mm
Ø3/16"

D x1

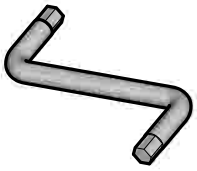

E x3

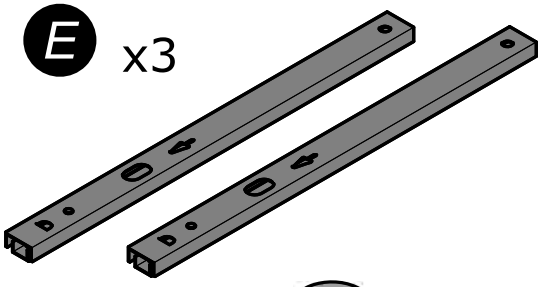

F x4

G x4

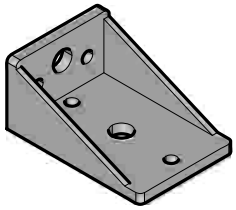

H x1

I x4

J x15

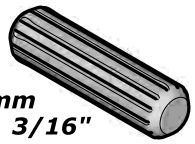

8x30mm
5/16" x 1 3/16"

K x6

4x30mm
5/32" x 1 3/16"

L x12

6,3x9mm
1/4" x 11/32"

M x2

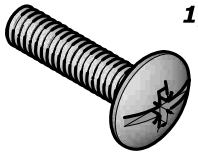

6x25mm
1/4" x 1"

N x6

4x9mm
5/32"x 11/32"

O x6

P x1

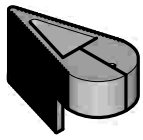

Q x2

R x12

6,3x13mm
1/4" x 1/2"

S x4

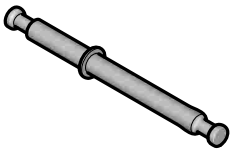

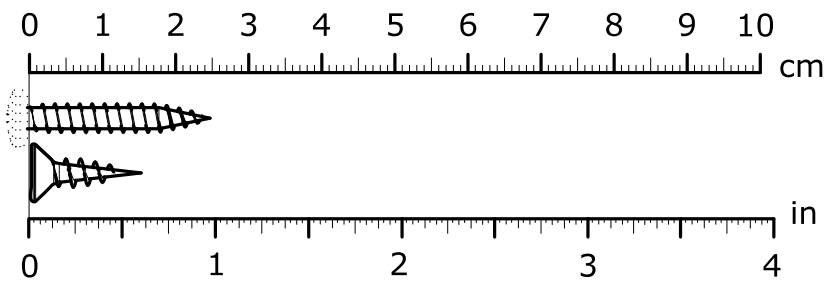

T x12

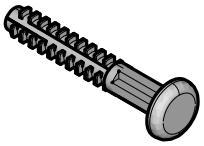

U x13

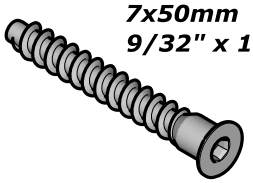

7x50mm
9/32" x 1 31/32"

V x6

Ø12mm
Ø15/32"

W x3

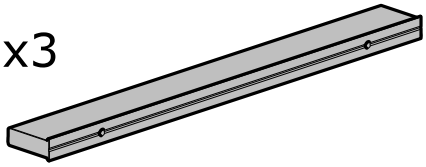

X x1

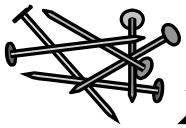

x25

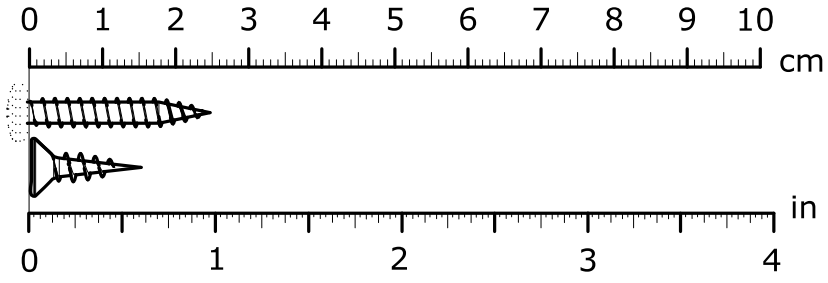

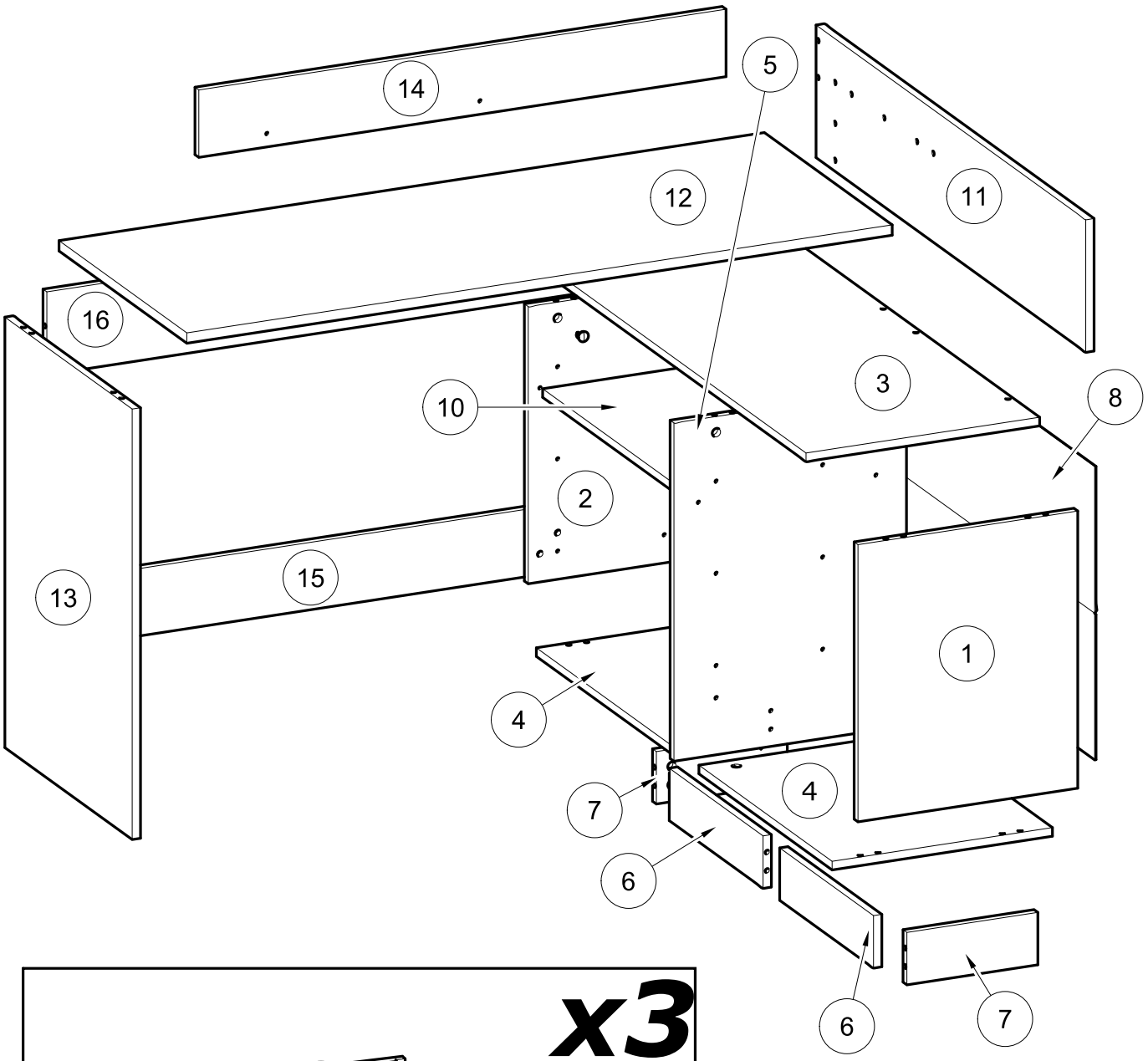

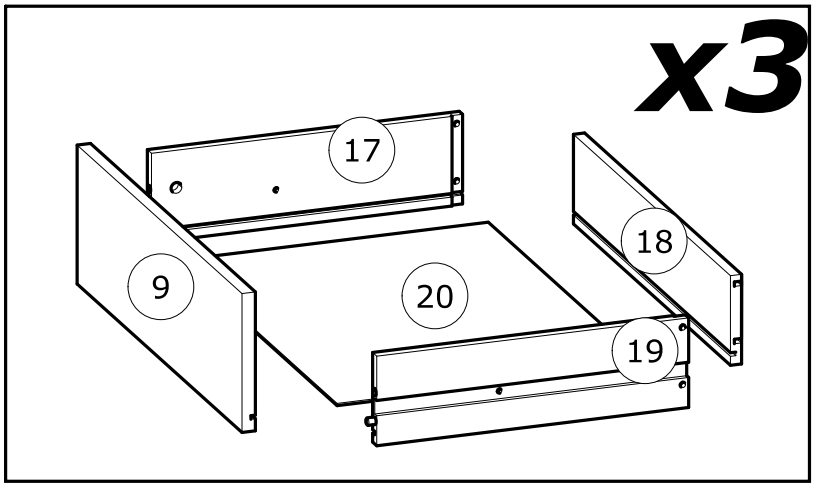

N°	MM			INCH			QTY
1	481	x	396	18 15/16	x	15 9/16	1
2	481	x	396	18 15/16	x	15 9/16	1
3	1 057	x	421	41 10/16	x	16 9/16	1
4	521	x	397	20 8/16	x	15 10/16	2
5	587	x	419	23 2/16	x	16 8/16	1
6	367	x	91	14 7/16	x	3 9/16	2
7	236	x	91	9 5/16	x	3 9/16	2
8	1 049	x	505	41 5/16	x	19 14/16	1
9	501	x	155	19 12/16	x	6 2/16	3
10	505	x	393	19 14/16	x	15 8/16	1

N°	MM			INCH			QTY
11	1 055	x	230	41 9/16	x	9 1/16	1
12	1 271	x	500	50 1/16	x	19 11/16	1
13	747	x	498	29 7/16	x	19 10/16	1
14	950	x	117	37 6/16	x	4 10/16	1
15	950	x	117	37 6/16	x	4 10/16	1
16	1 254	x	144	49 6/16	x	5 11/16	1
17	350	x	100	13 12/16	x	3 15/16	3
18	477	x	100	18 12/16	x	3 15/16	3
19	350	x	100	13 12/16	x	3 15/16	3
20	483	x	348	19	x	13 11/16	3

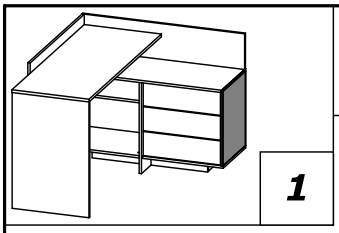

1

F x2

J x4

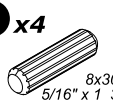

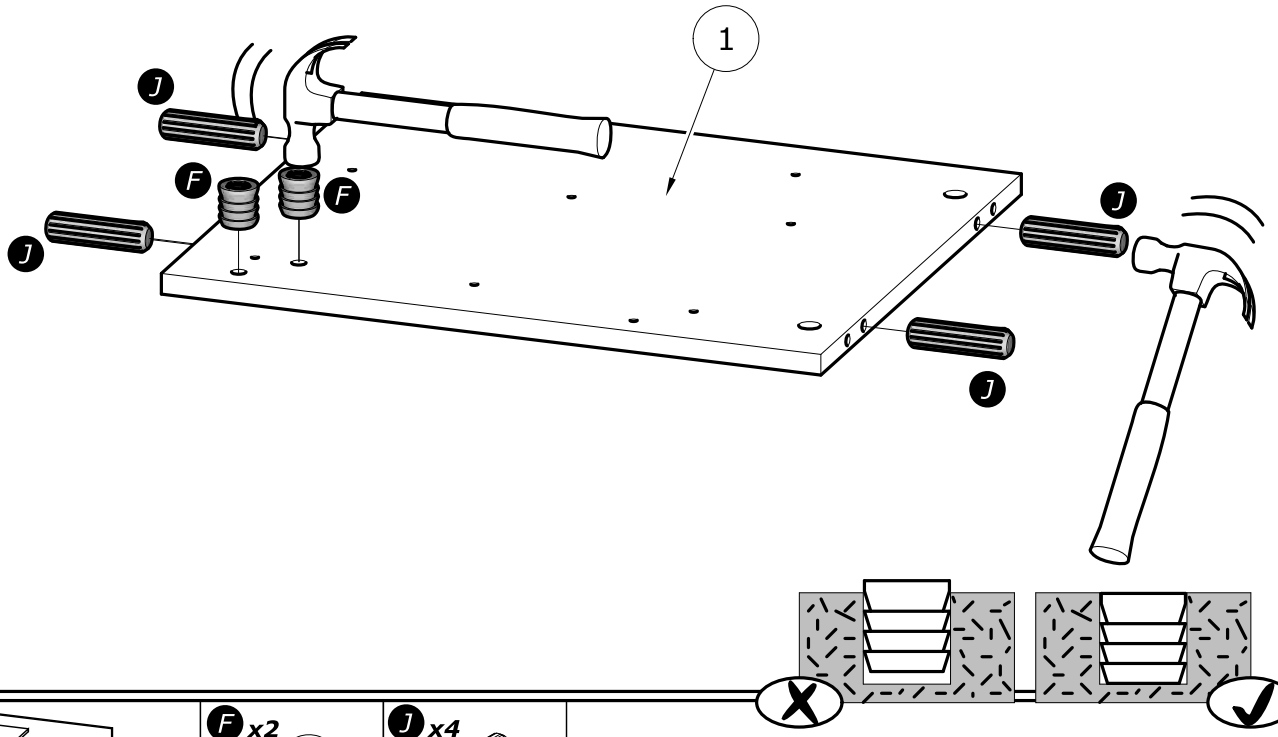

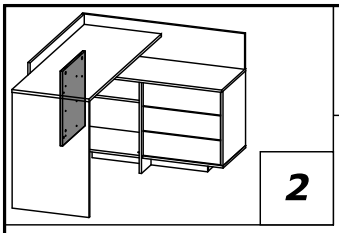

2

F x2

J x4

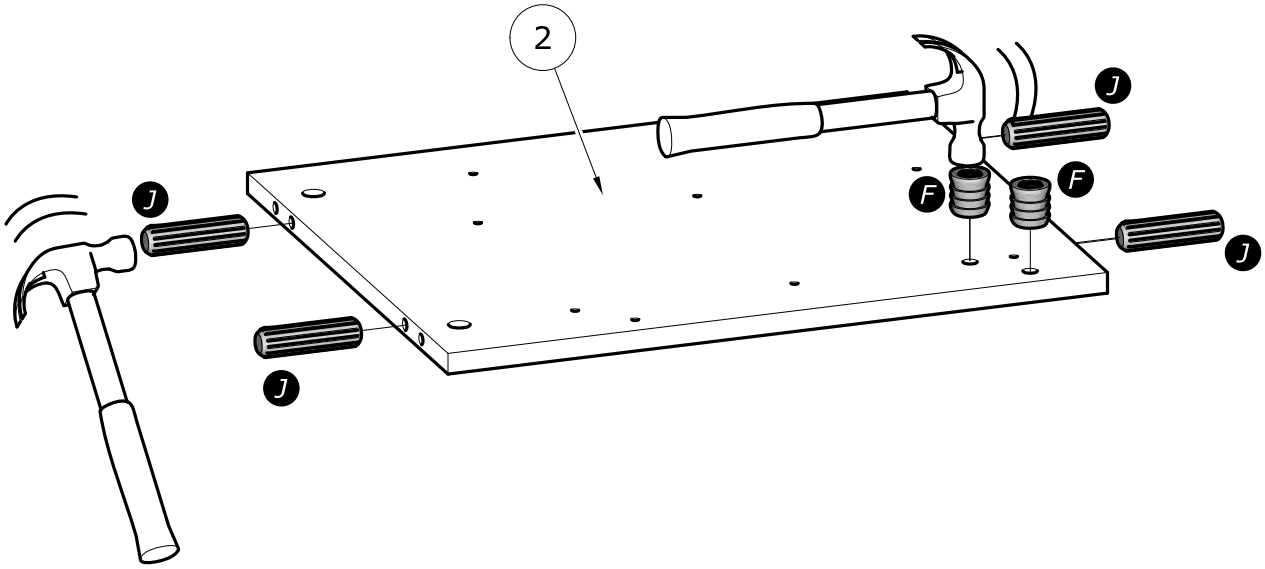

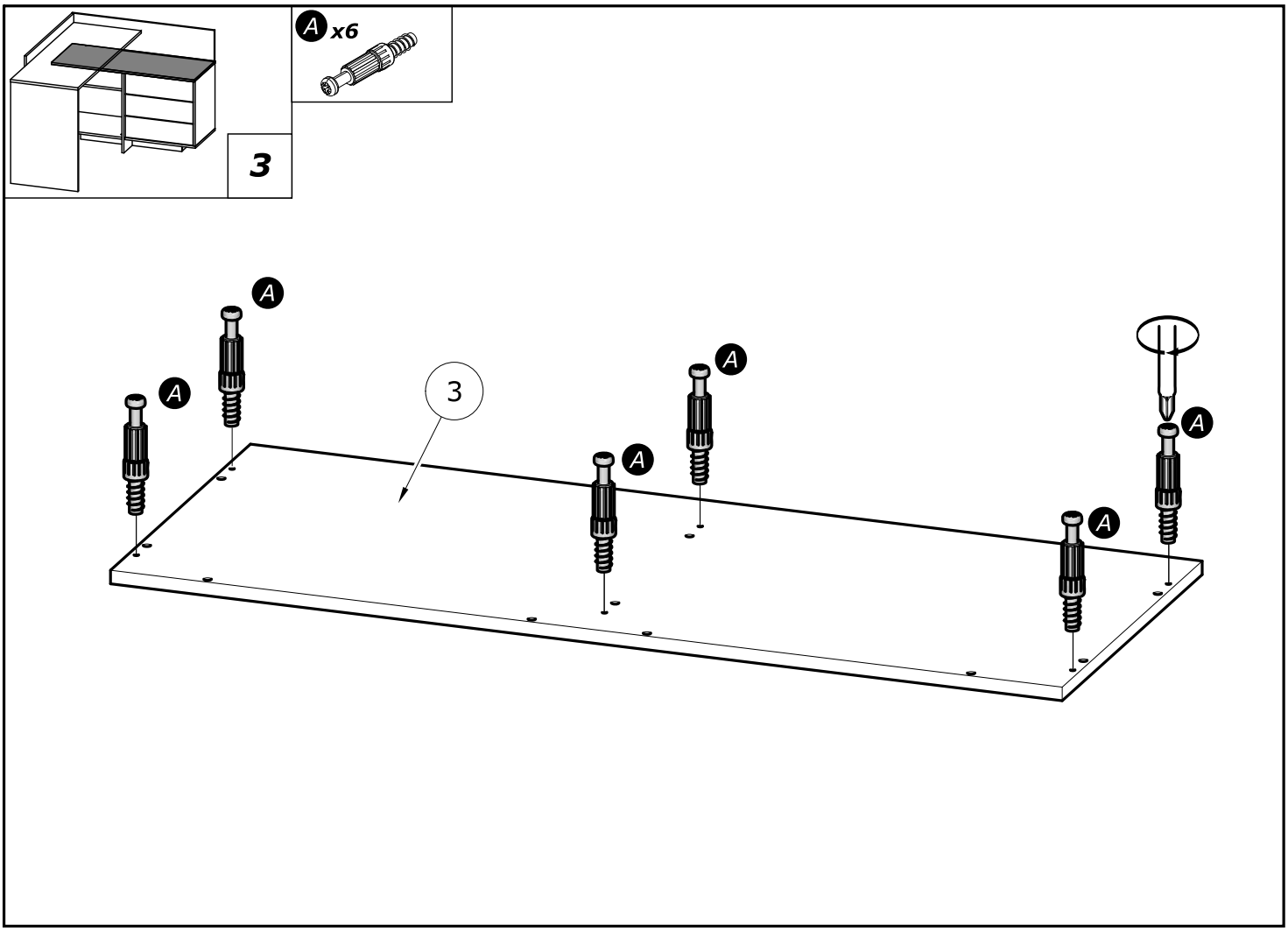
A x6
3
A
A
A
A
A
3

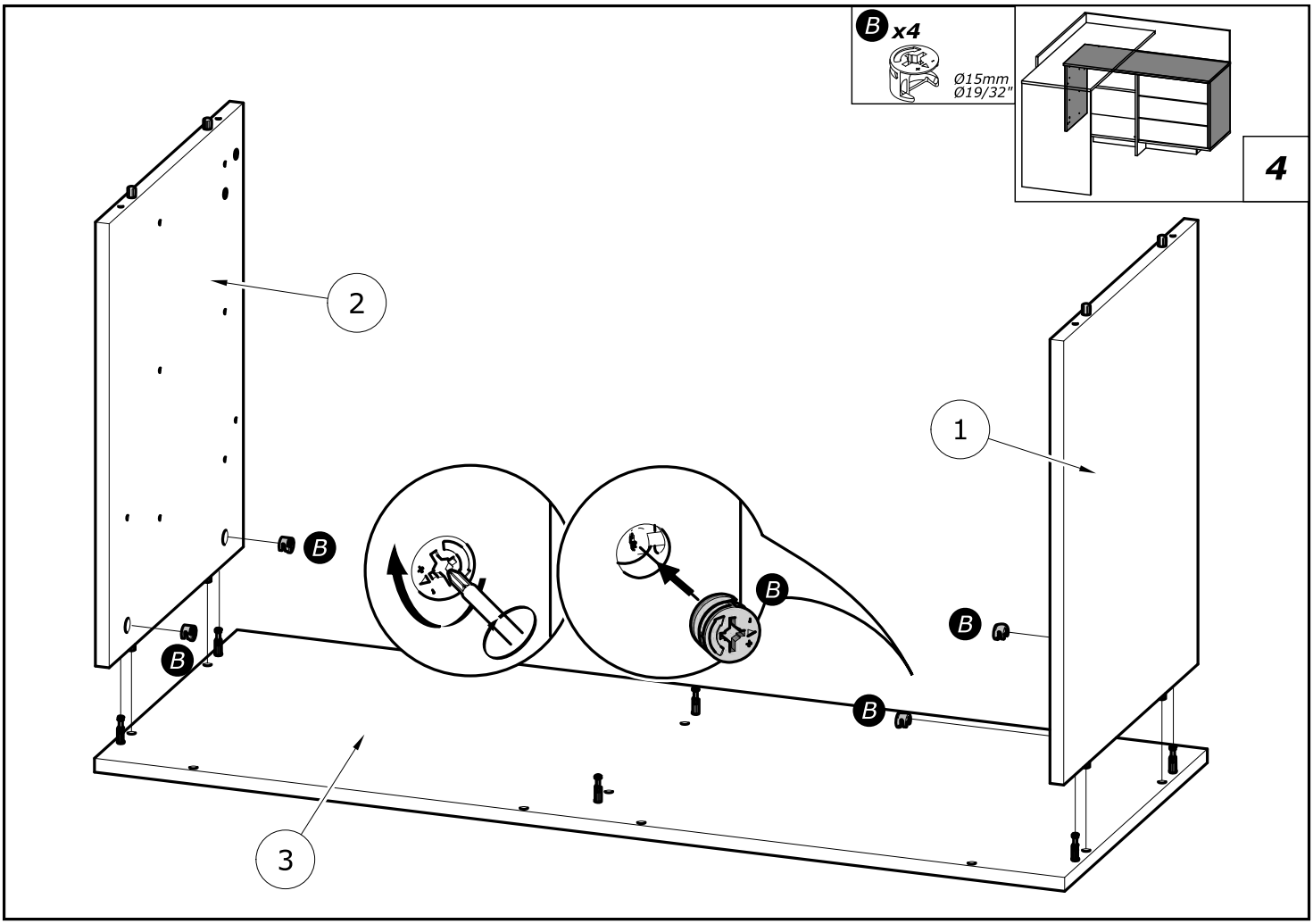
B x4
Ø15mm
Ø19/32"
4
2
1
B
B
B
B
B
3

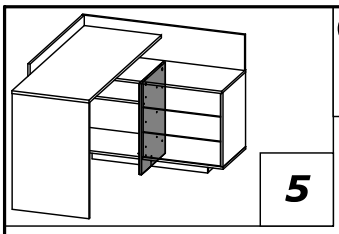

J x2

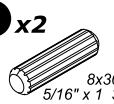

5

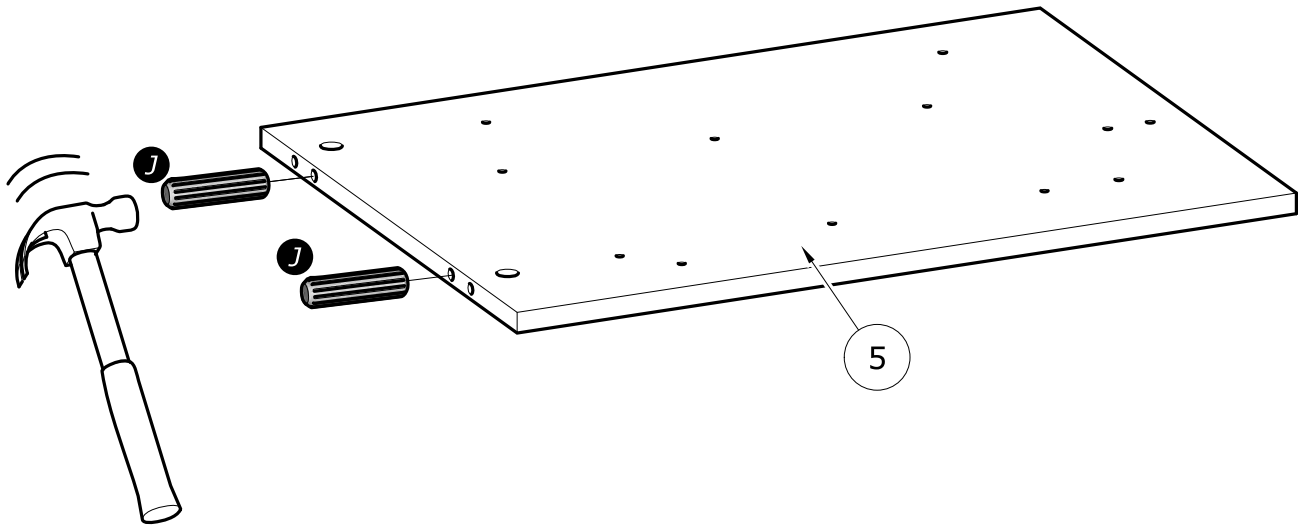

B x4

S x2

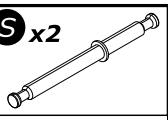

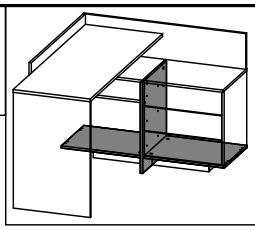

6

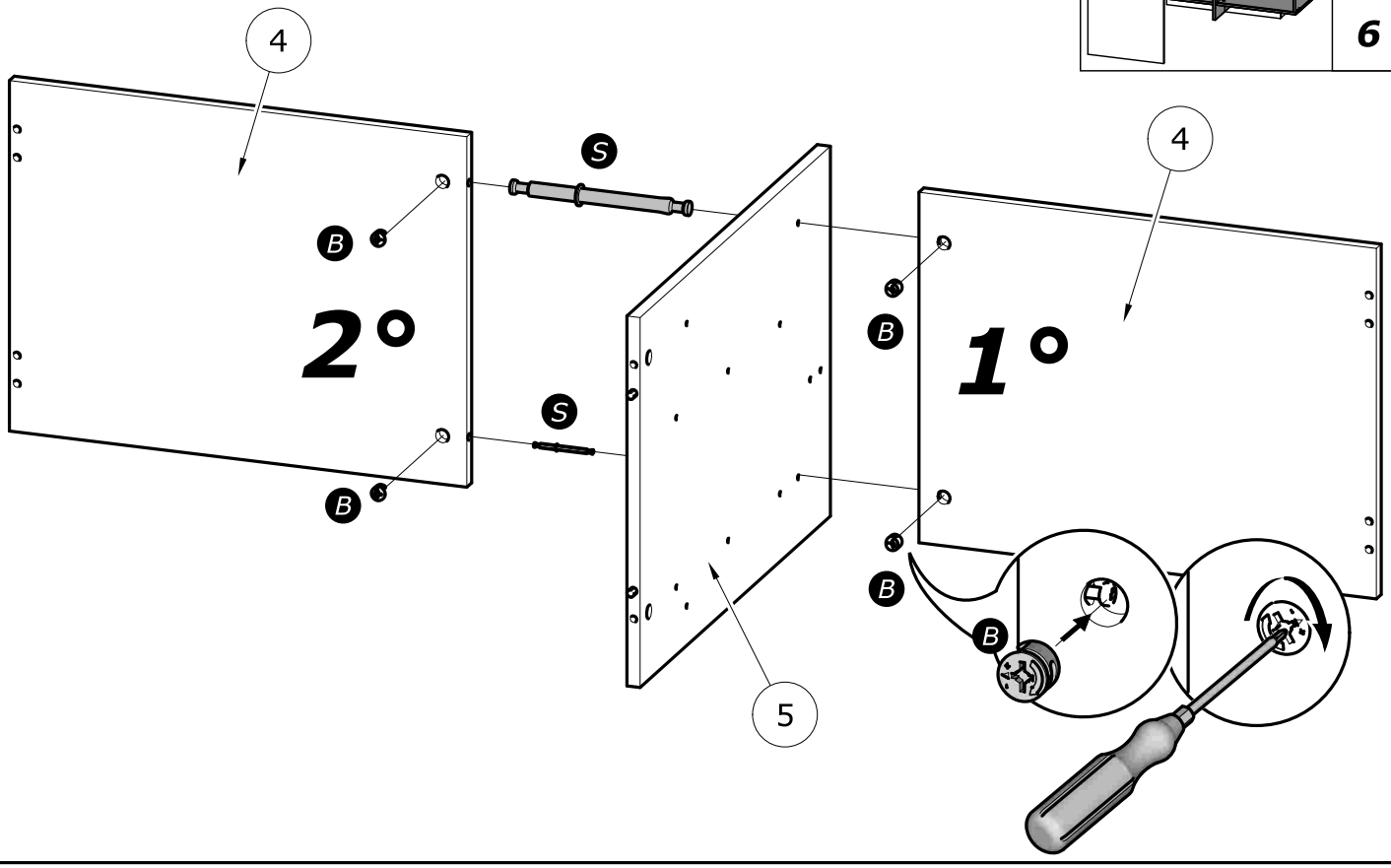

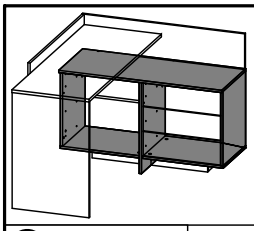

7

B x2

Ø15mm
Ø19/32"

D

U x4

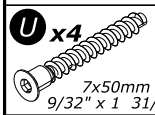

7x50mm
9/32" x 1 31/32"

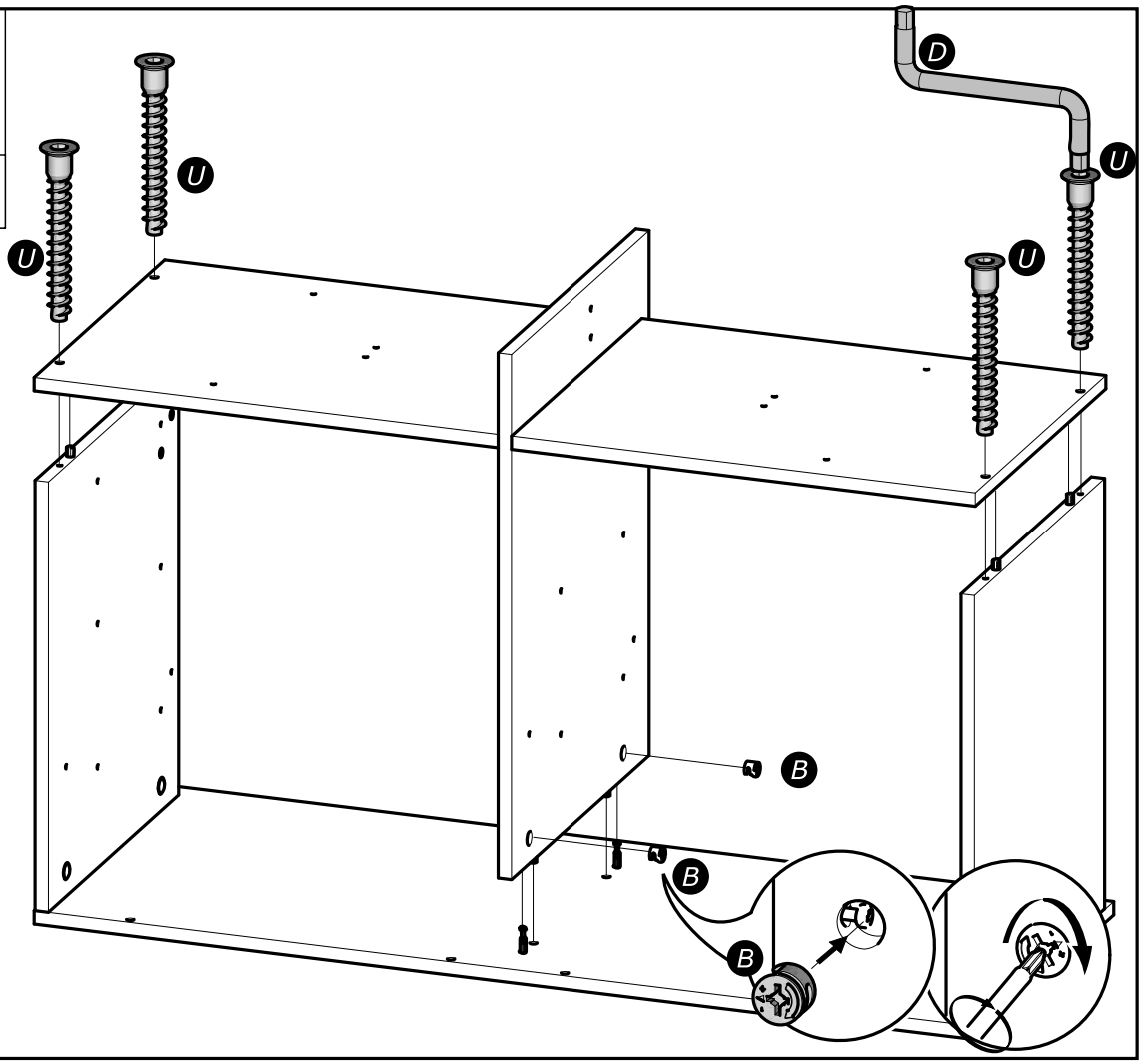

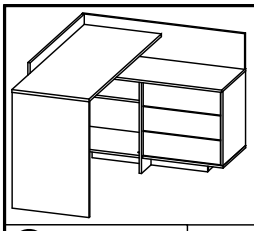

8

G x4

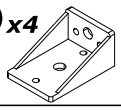

R x4

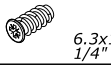

6.3x13mm
1/4" x 1/2"

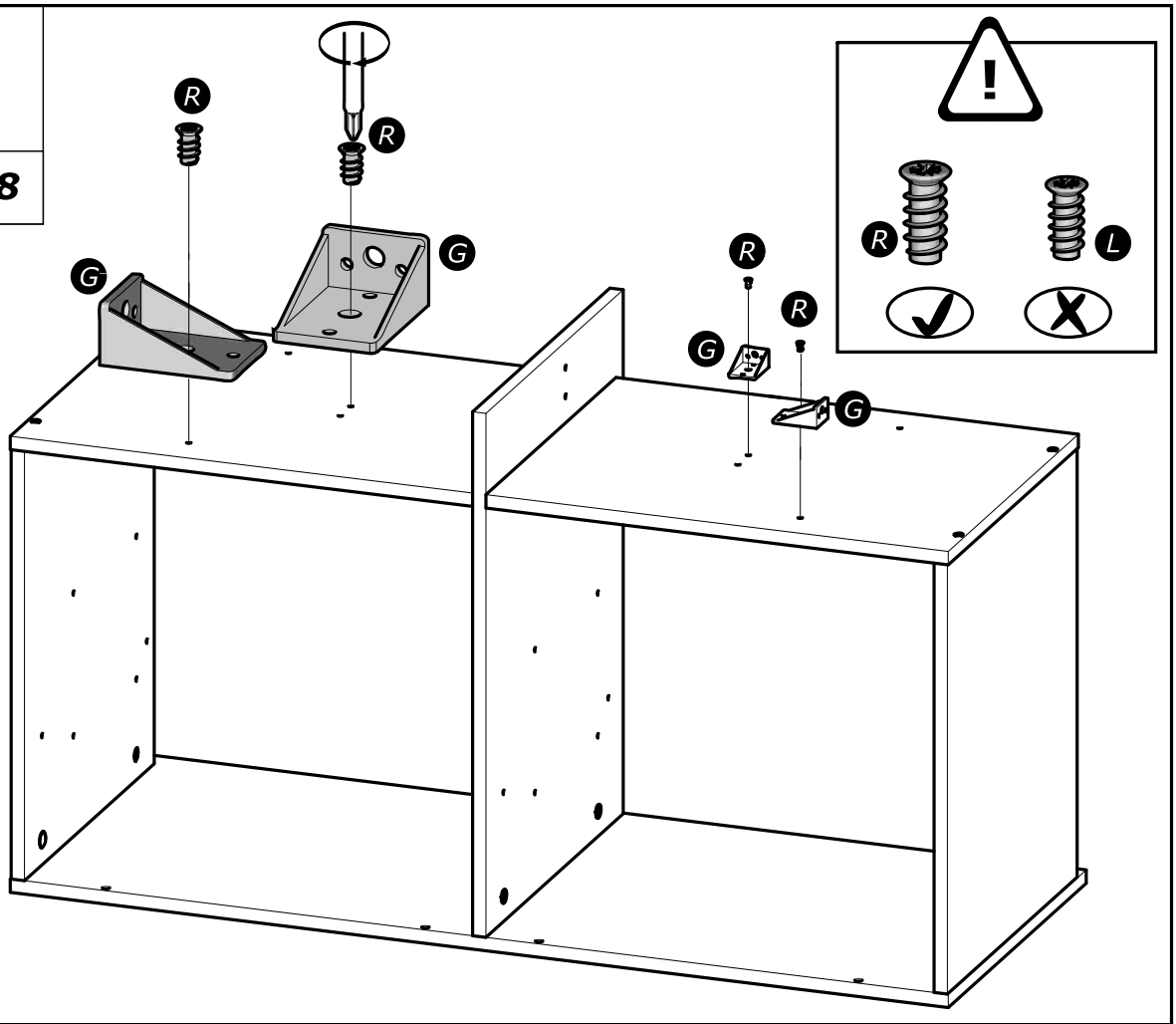

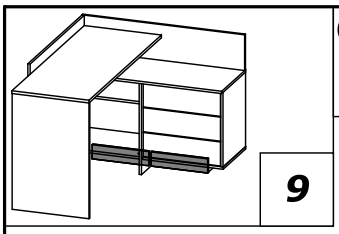

9

A x4

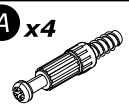

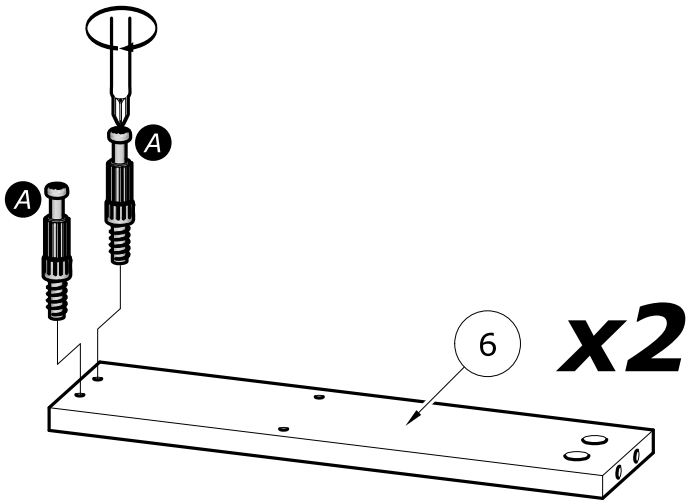

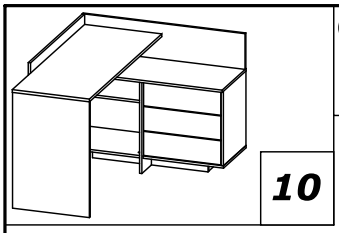

10

B x4

S x2

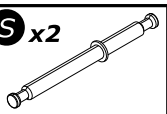

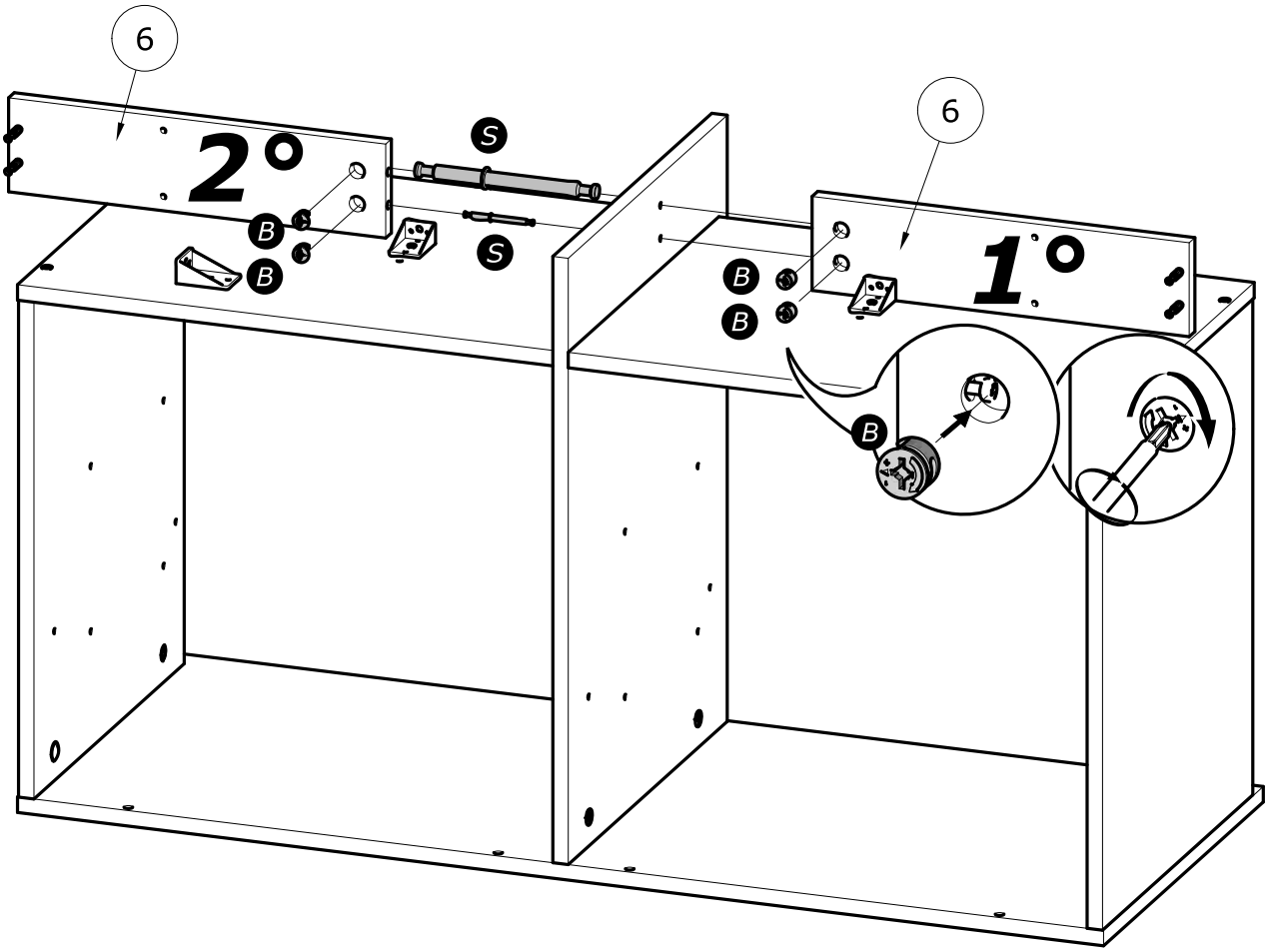

B x4

Ø15mm
Ø19/32"

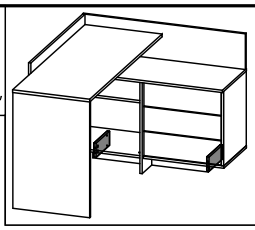

11

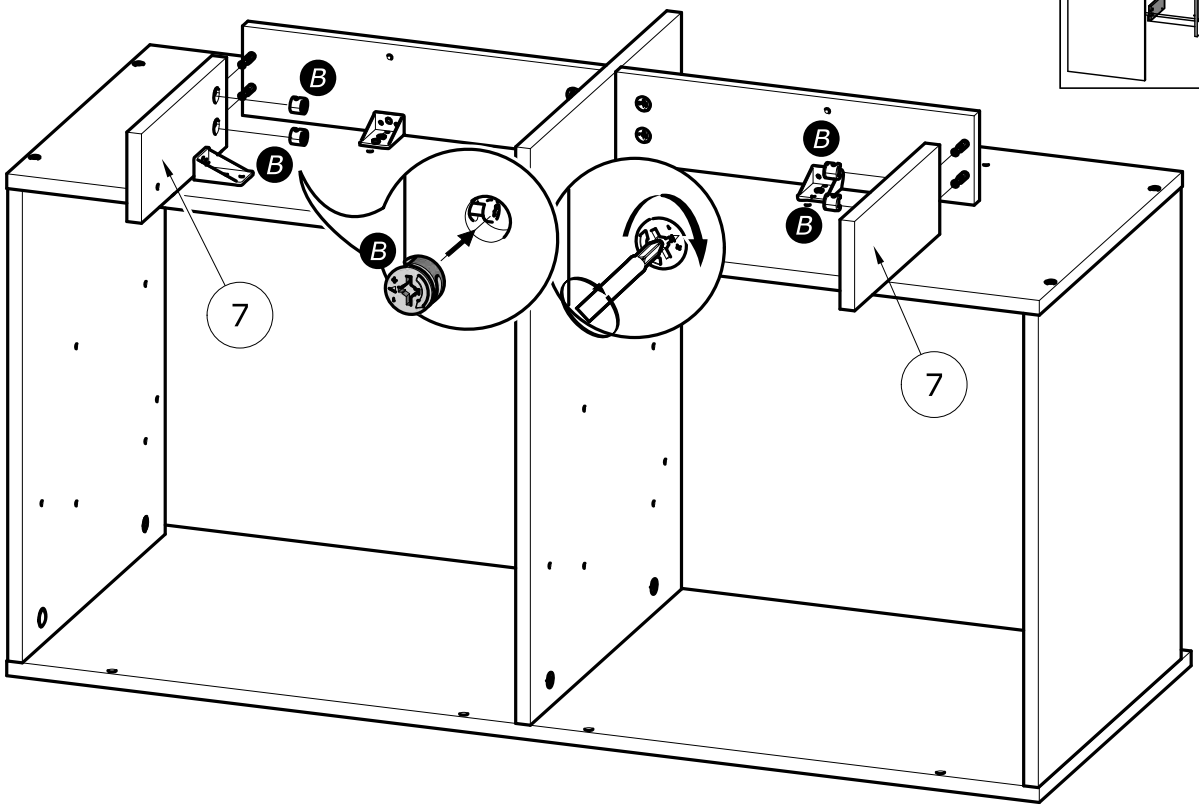

R x4

6.3x13mm
1/4" x 1/2"

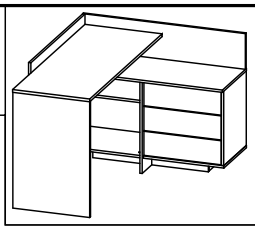

12

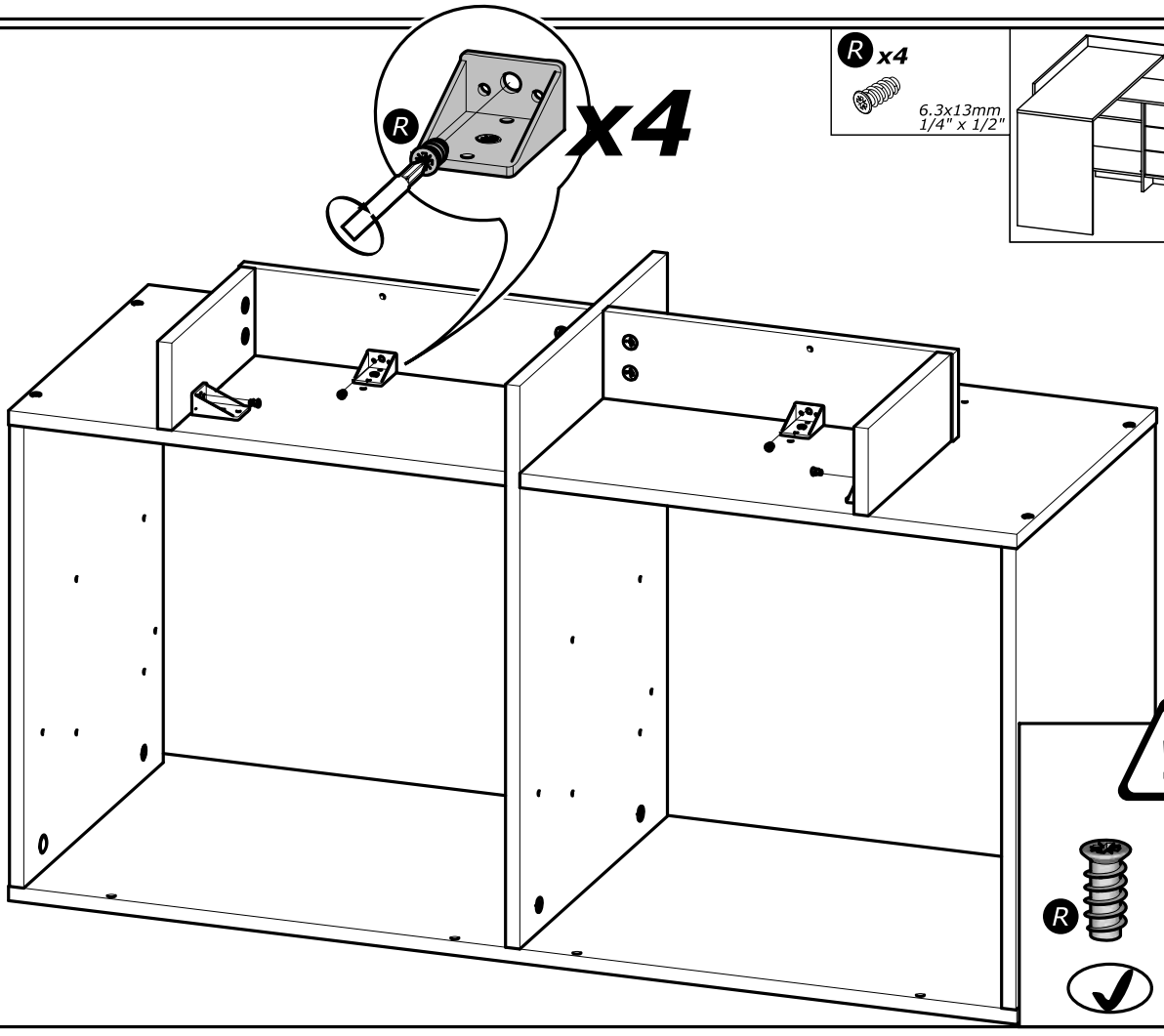

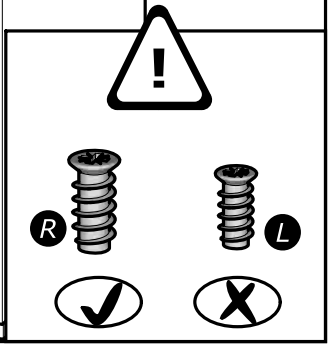

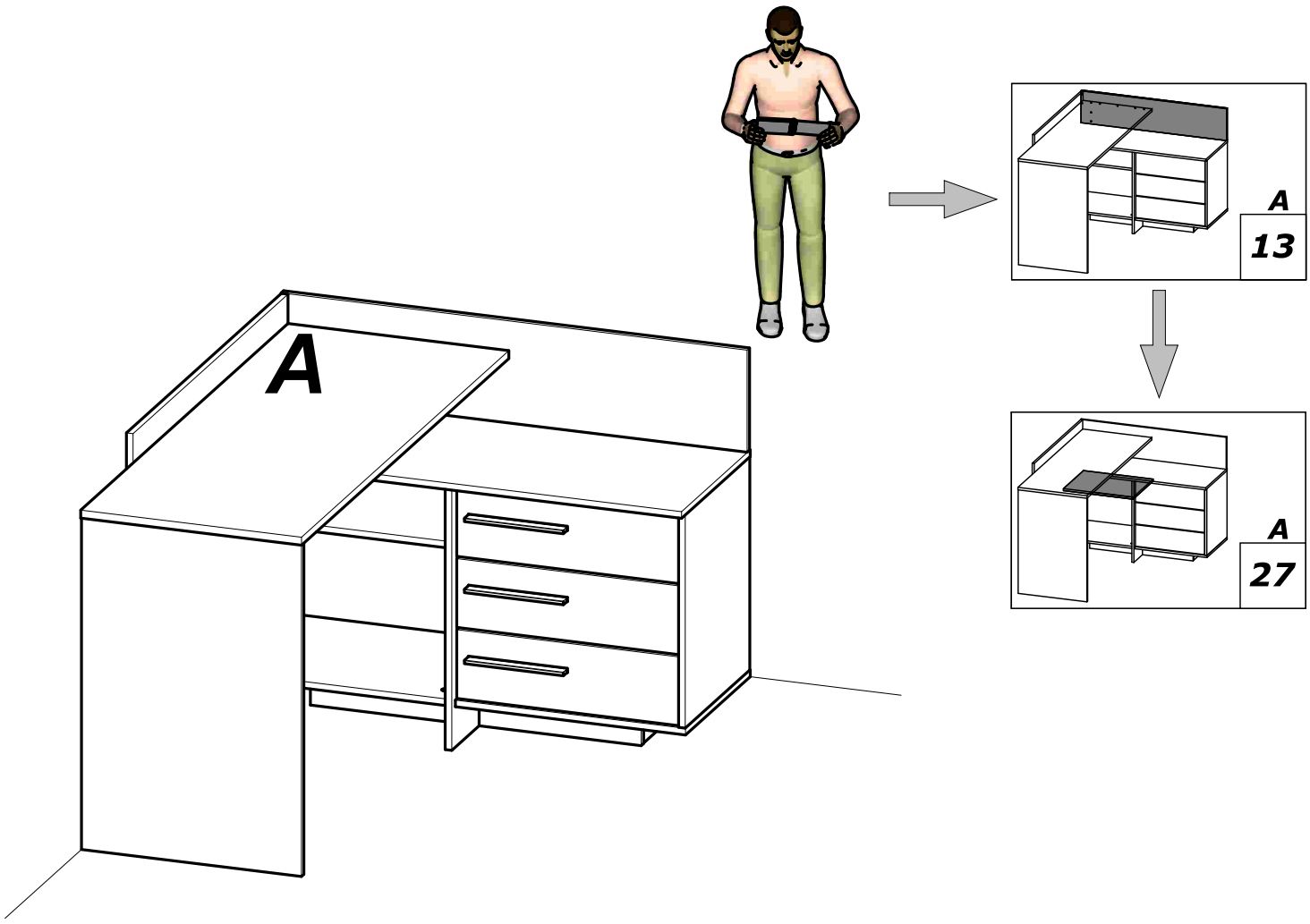
A
A
13
A
27

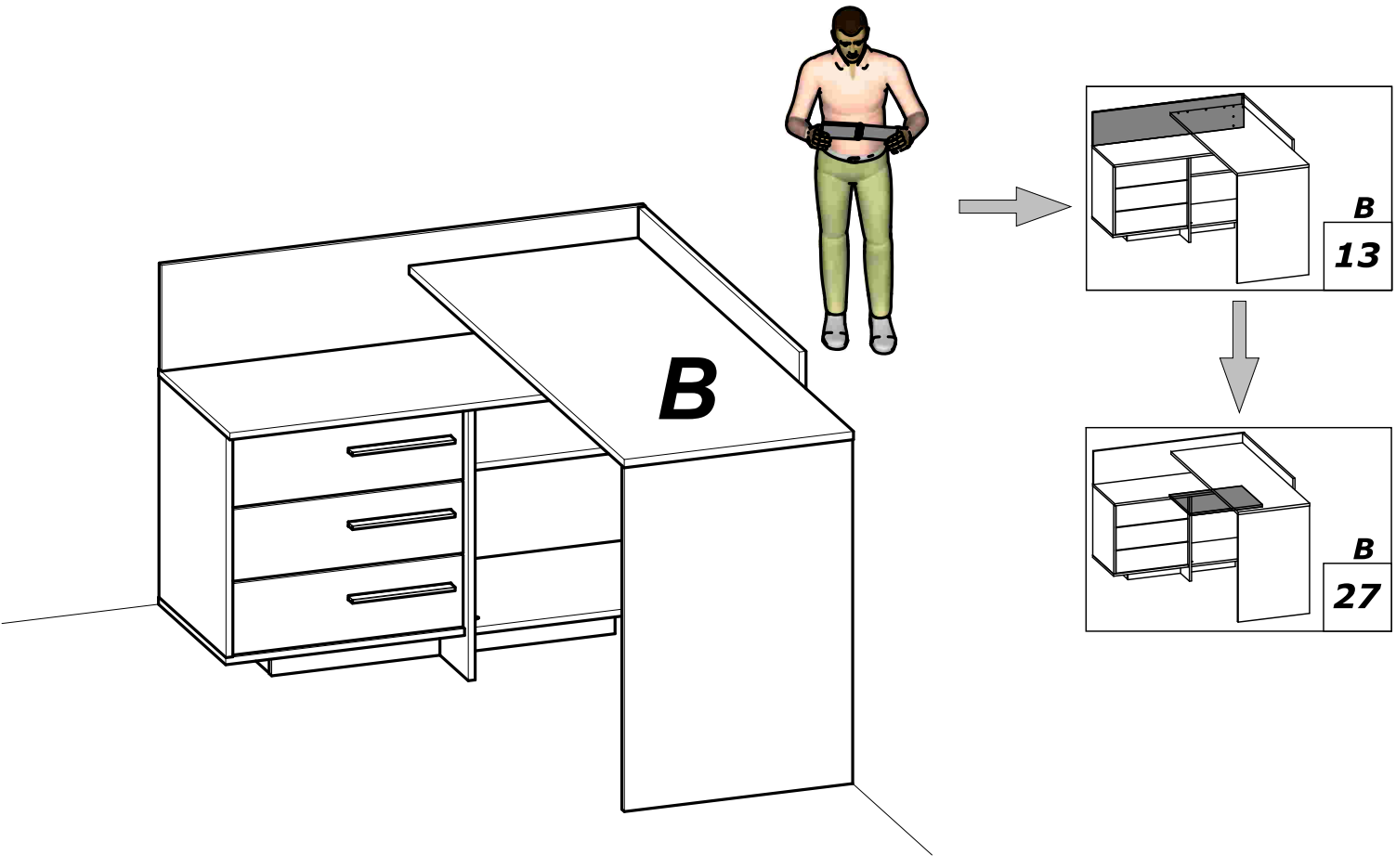
B
B
13
B
27

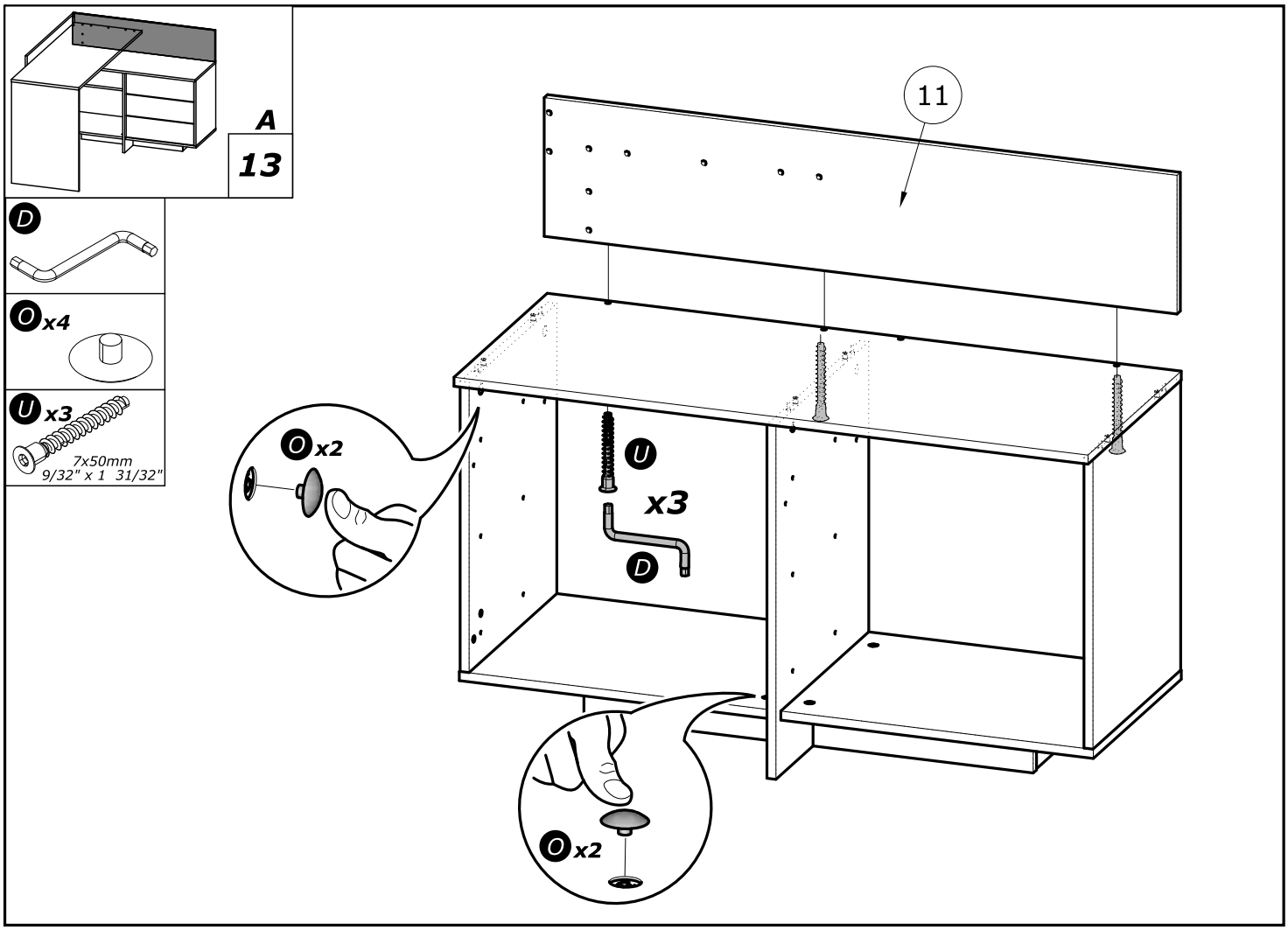
A
13
D
O x4
U x3
7x50mm
9/32" x 1 31/32"
11
O x2
U
x3
D
O x2

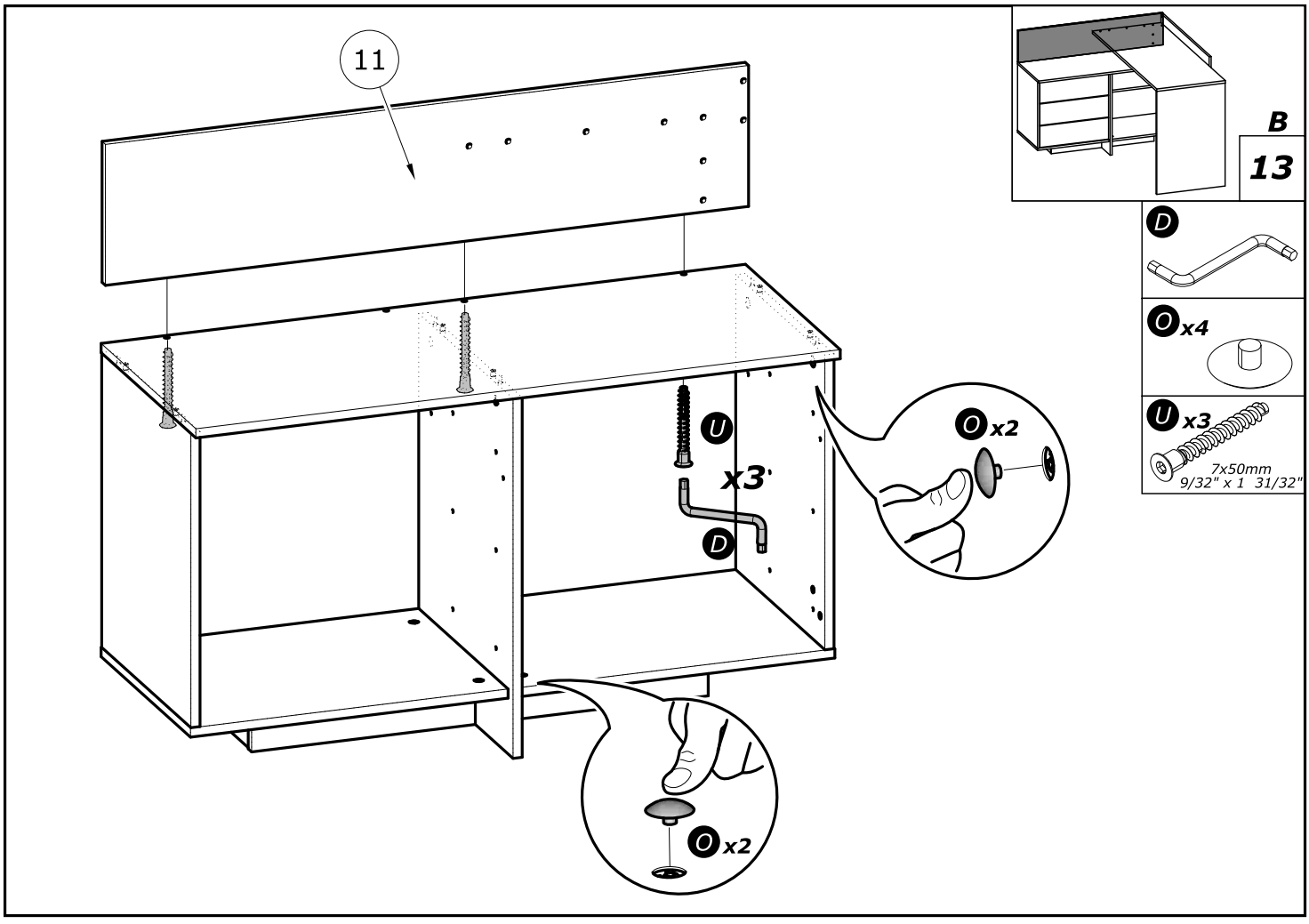
11
B
13
D
O x4
U x3
7x50mm
9/32" x 1 31/32"
U
x3
D
O x2
O x2

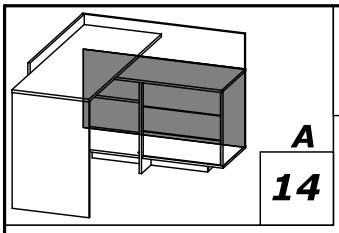

A

14

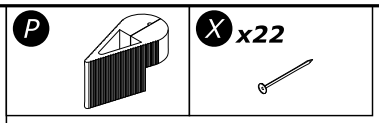

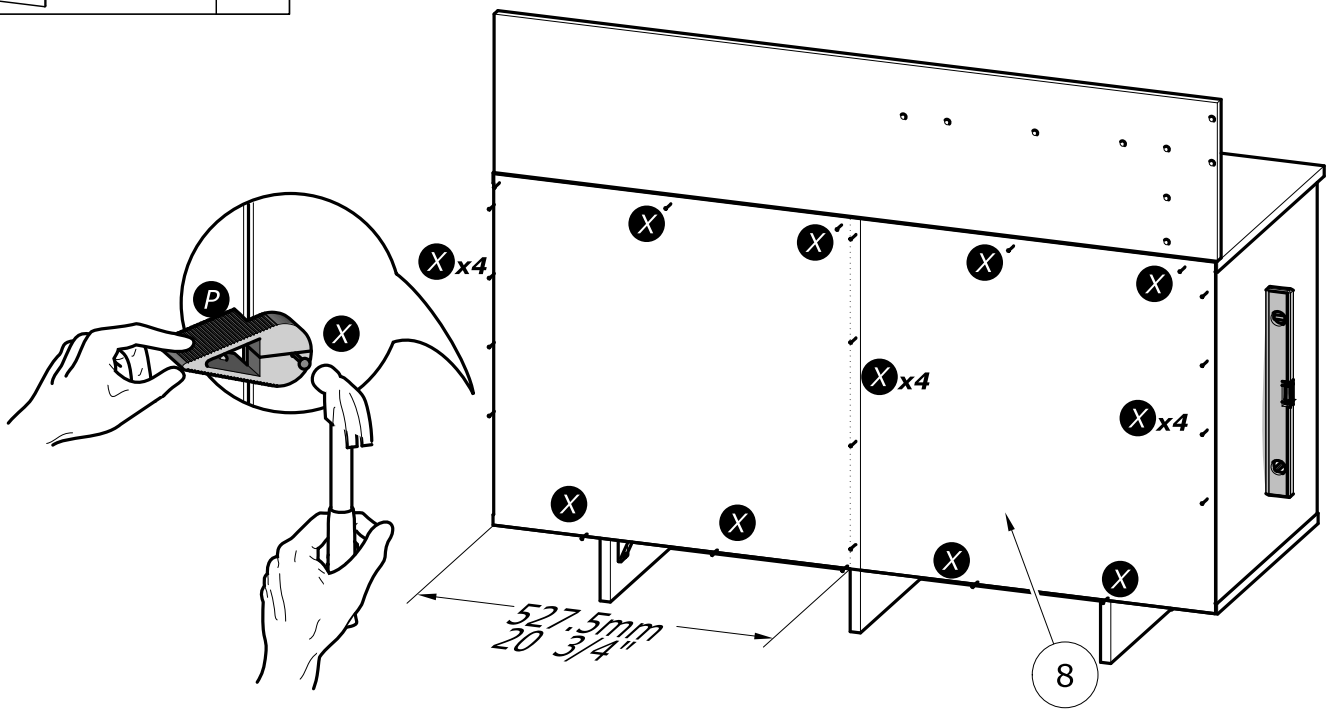

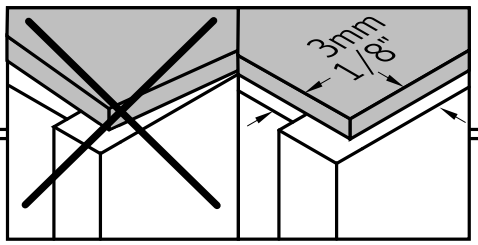

www.Demeyere.fr

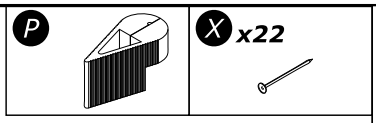

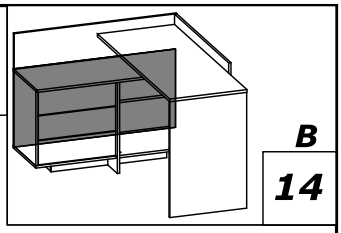

B

14

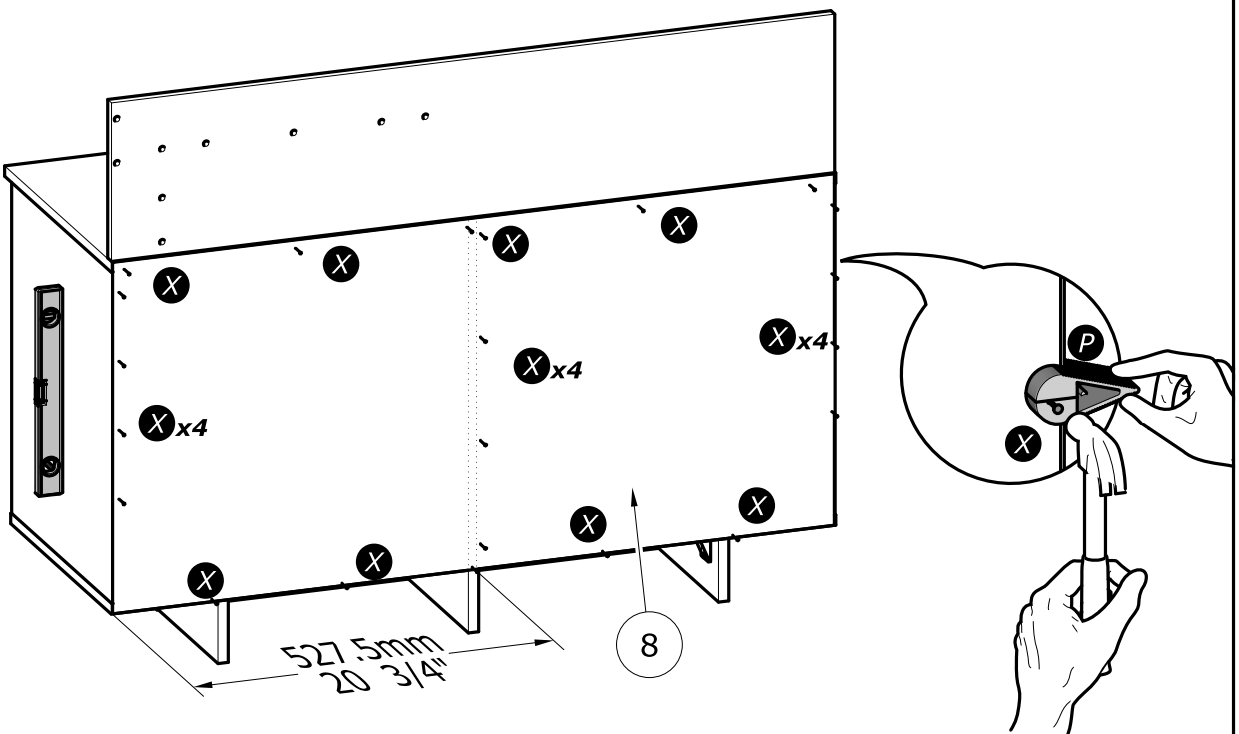

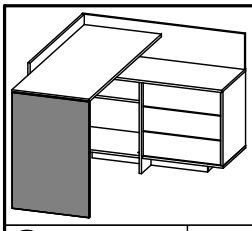

A

15

A x4

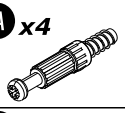

C x4

J x2

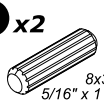

8x30mm
5/16" x 1 3/16"

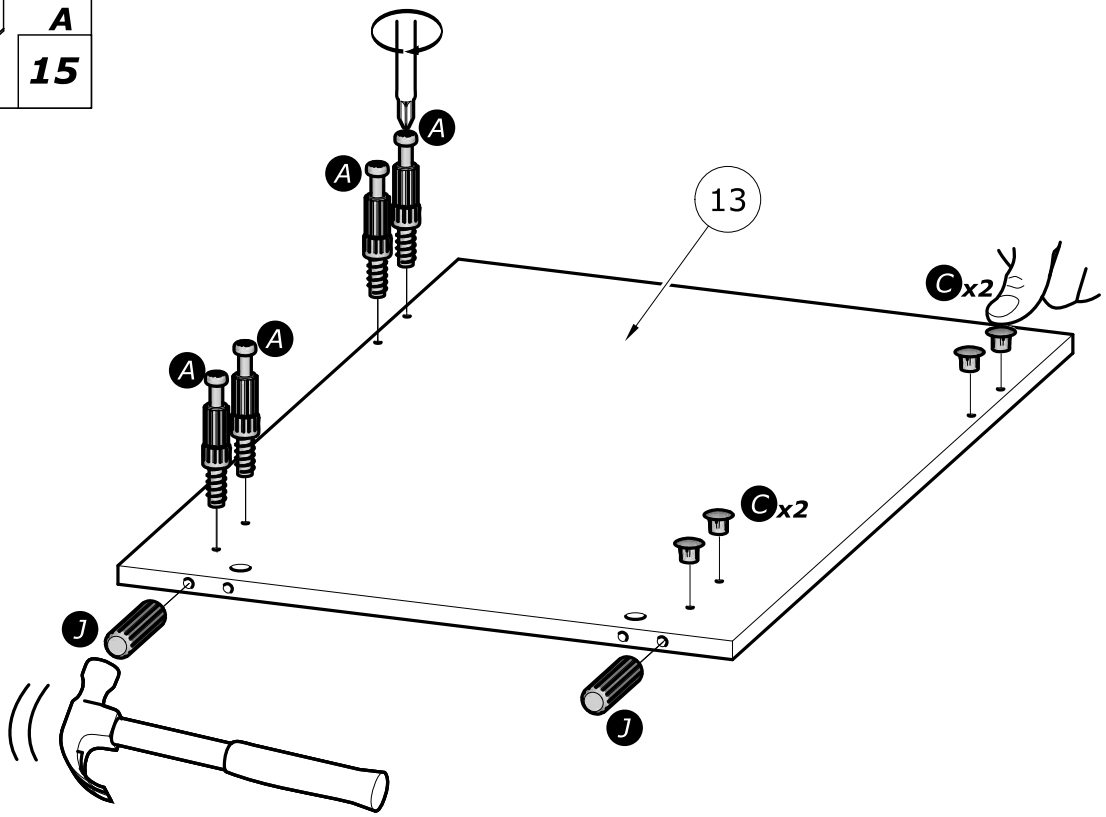

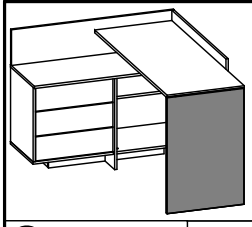

B

15

A x4

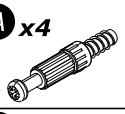

C x4

J x2

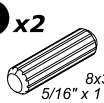

8x30mm
5/16" x 1 3/16"

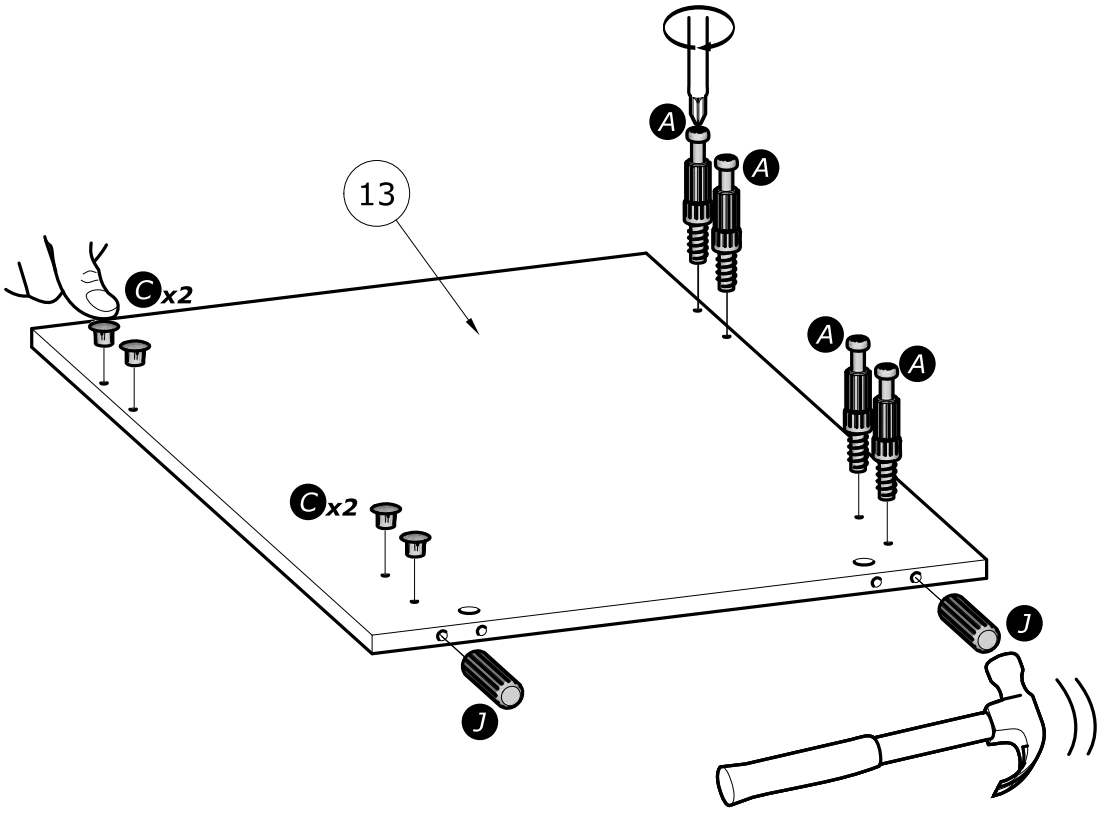

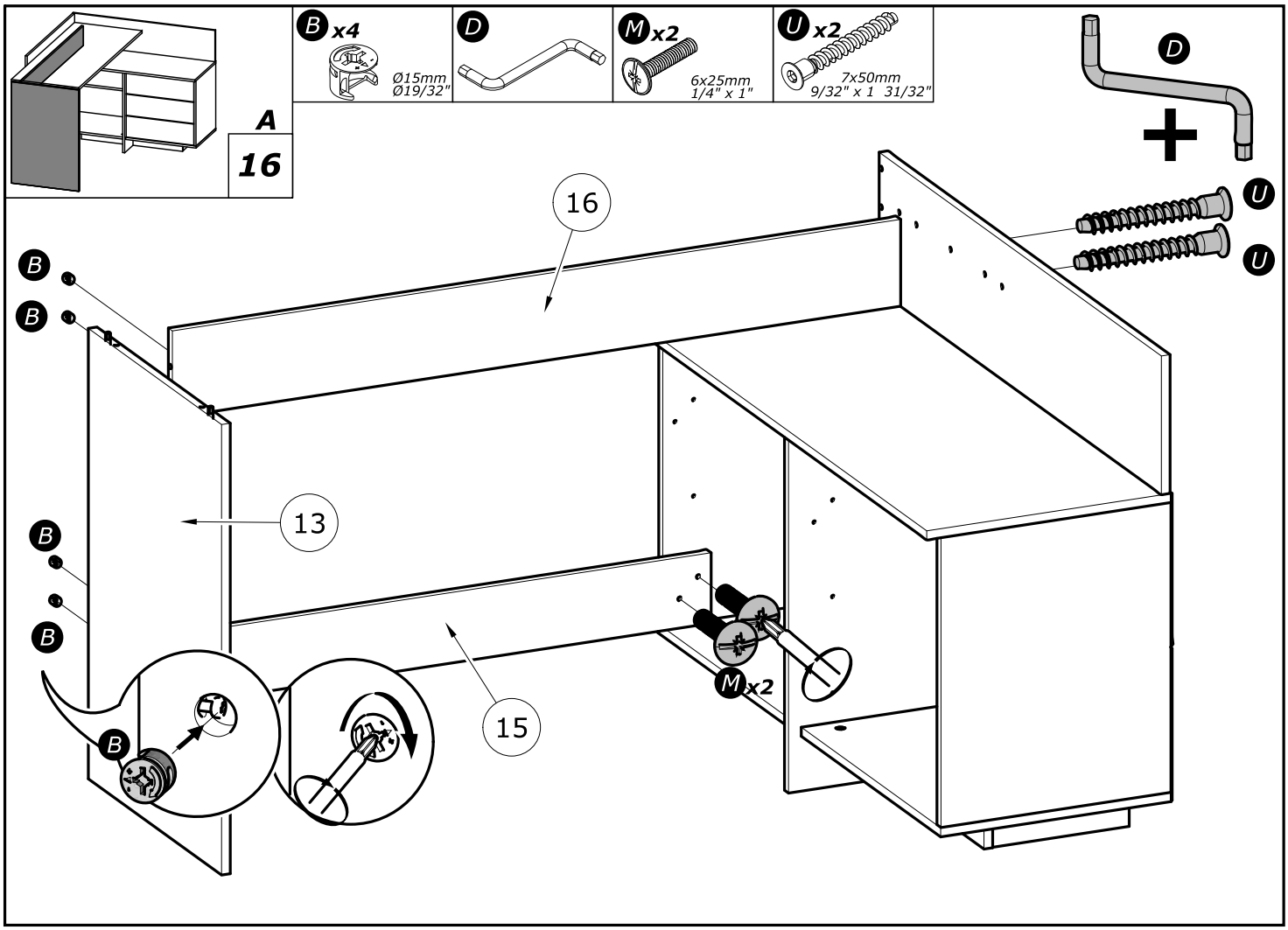
A
16
B x4
Ø15mm
Ø19/32"
D
M x2
6x25mm
1/4" x 1"
U x2
7x50mm
9/32" x 1 31/32"
D
U
U
16
B
B
13
B
B
B
M x2
15

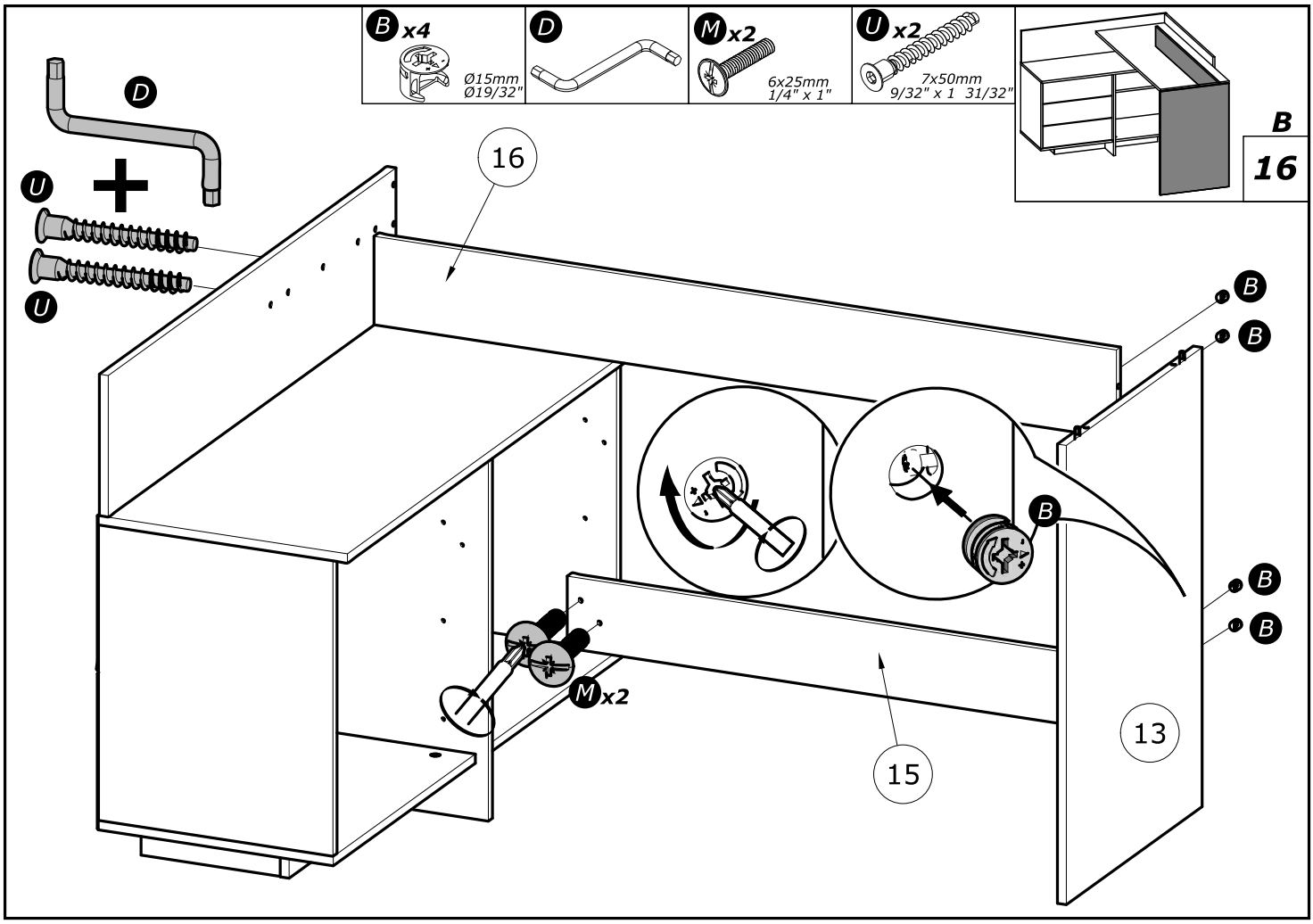
B x4
Ø15mm
Ø19/32"
D
M x2
6x25mm
1/4" x 1"
U x2
7x50mm
9/32" x 1 31/32"
B
16
D
U
U
16
B
B
B
B
B
M x2
15
13

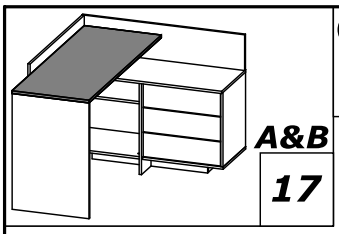

A&B

17

A x2

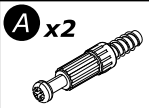

J x3

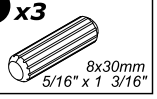

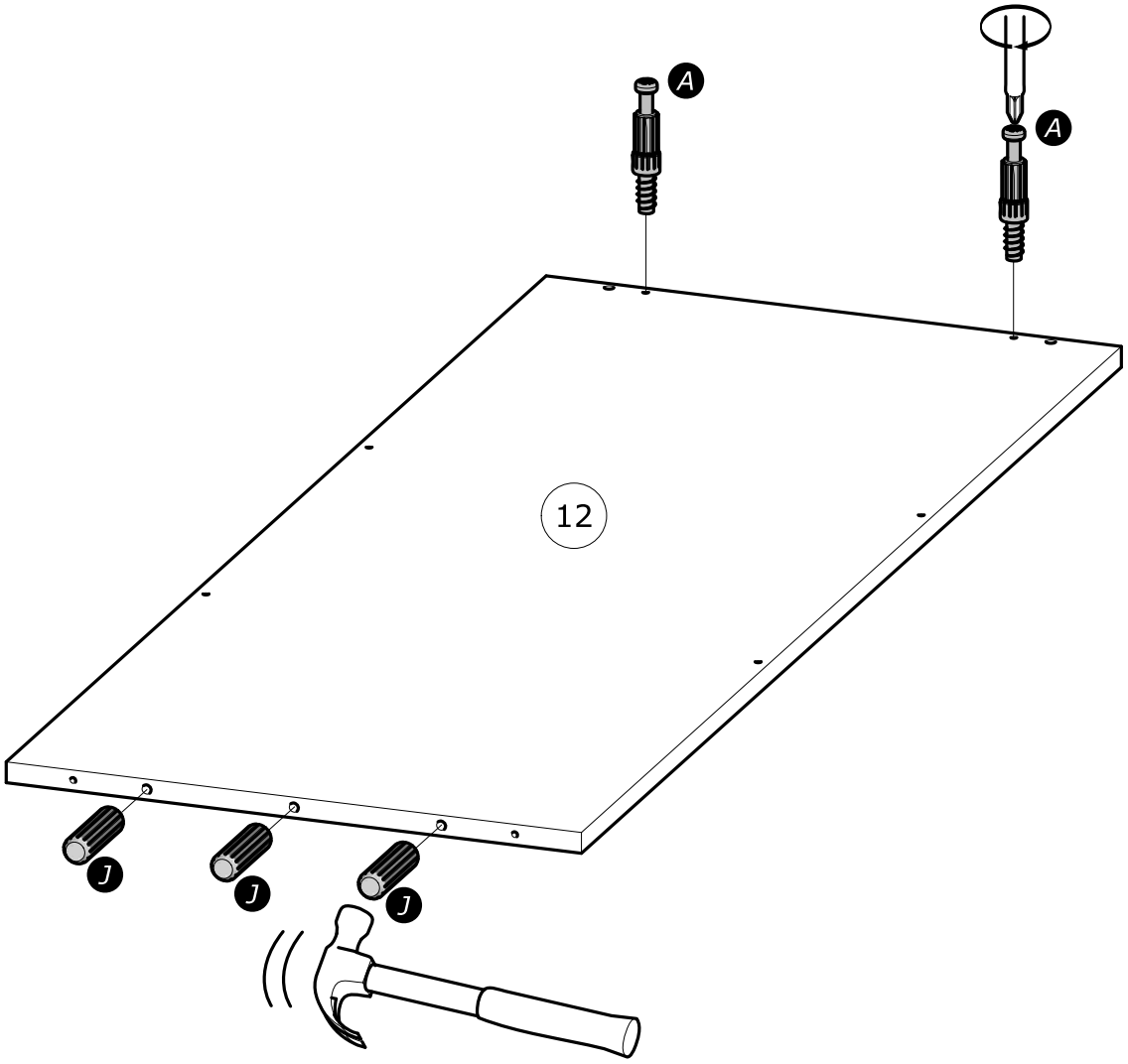

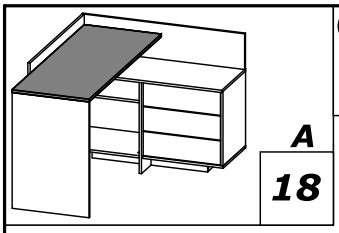

A

18

Q x2

R x4

6.3x13mm
1/4" x 1/2"

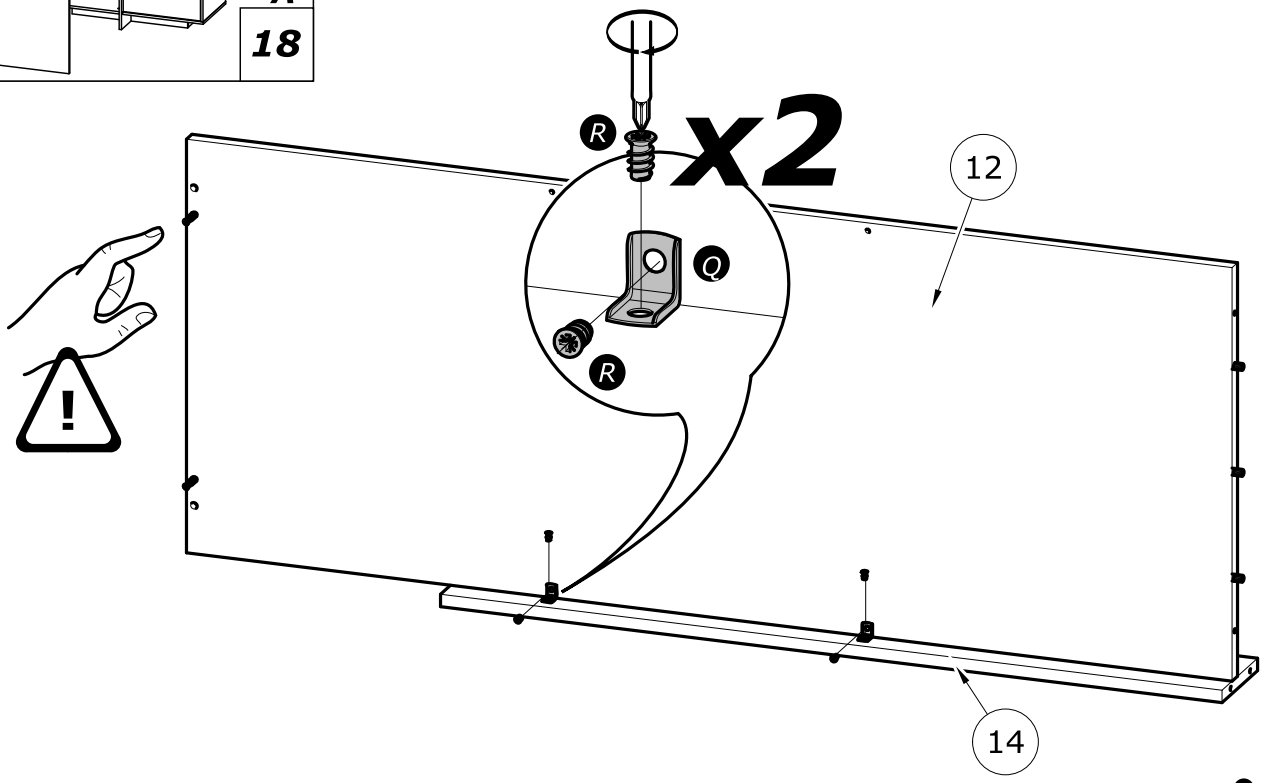

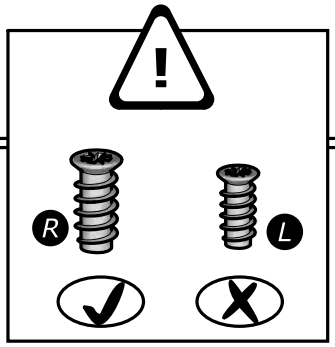

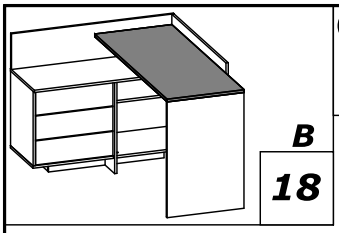

B

18

Q x2

R x4

6.3x13mm
1/4" x 1/2"

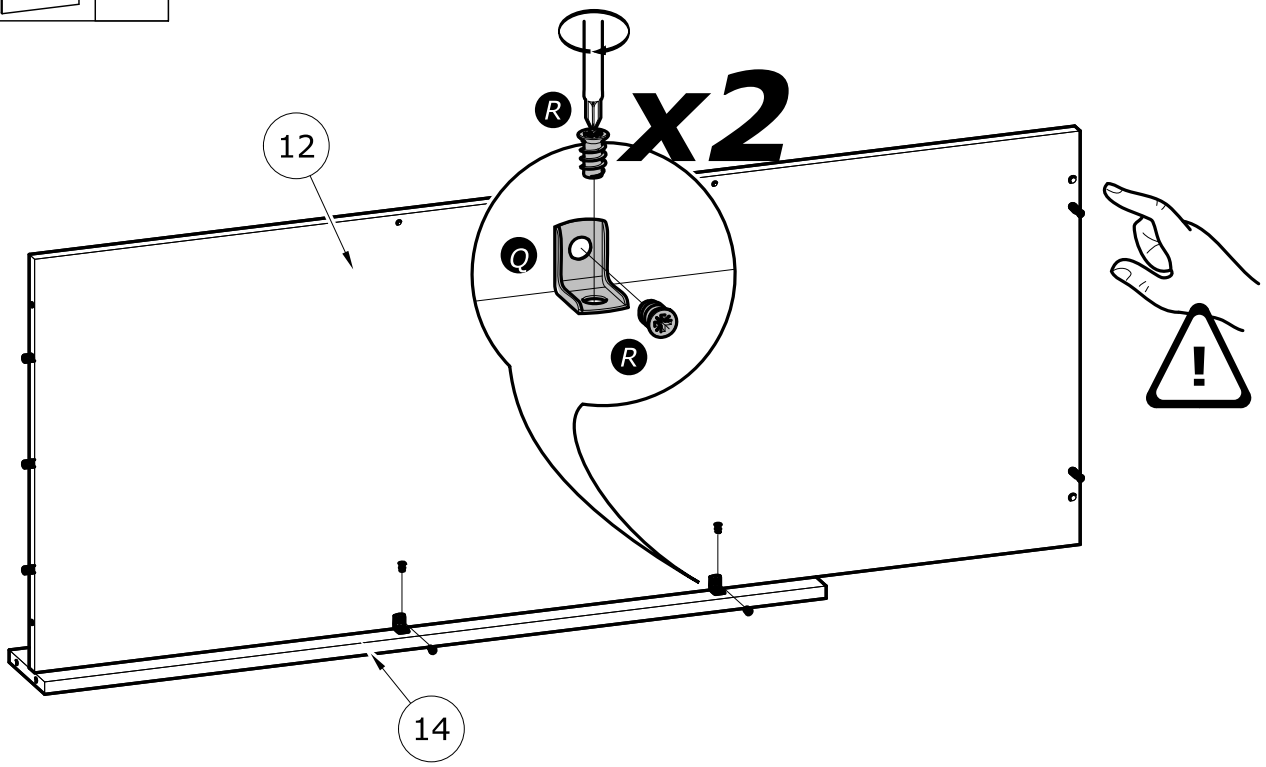

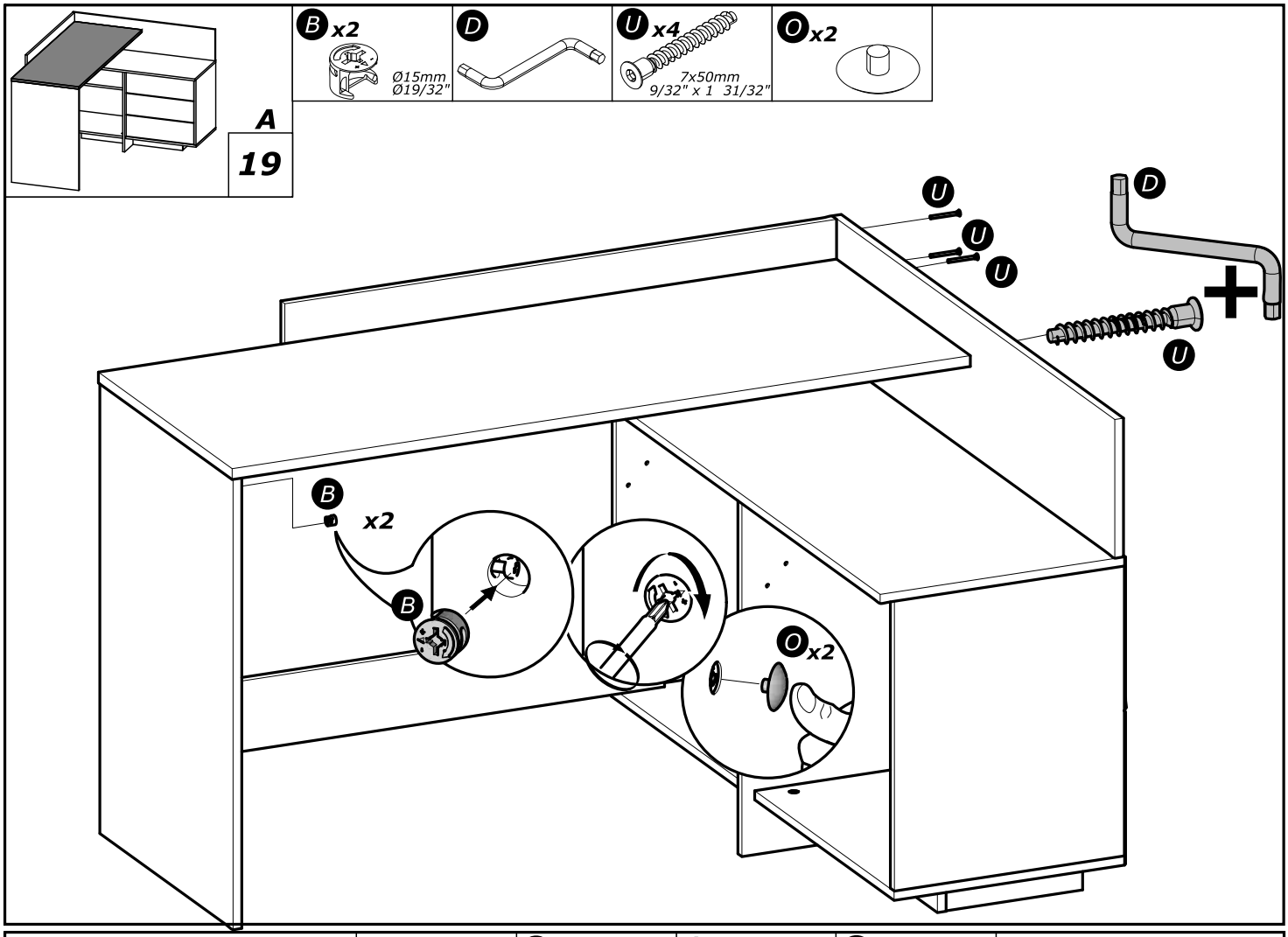
A
19
B x2
Ø15mm
Ø19/32"
D
U x4
7x50mm
9/32" x 1 31/32"
O x2
U
U
U
D
U
B
x2
B
O x2

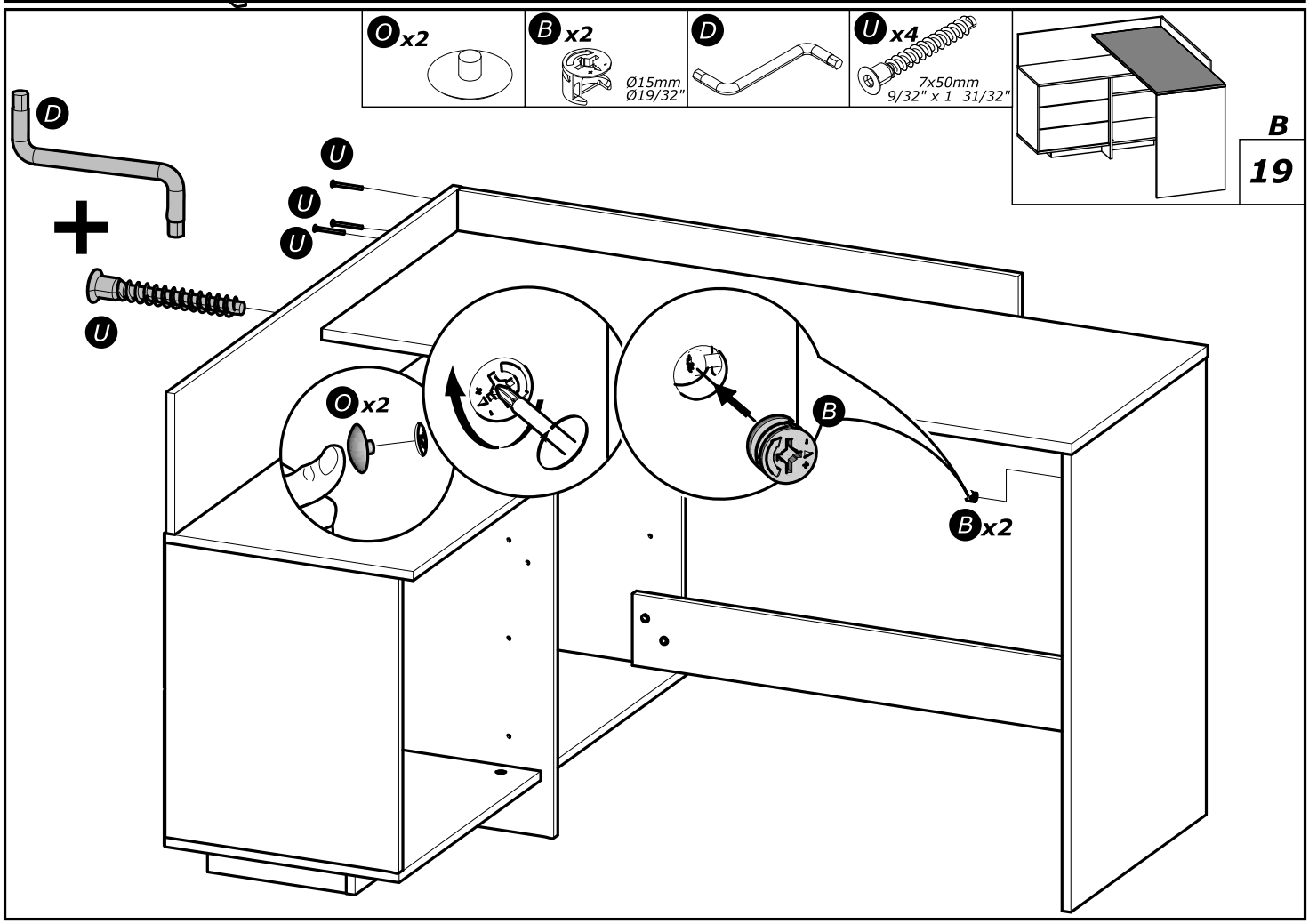
O x2
B x2
Ø15mm
Ø19/32"
D
U x4
7x50mm
9/32" x 1 31/32"
B
19
D
U
U
U
U
O x2
B
B x2

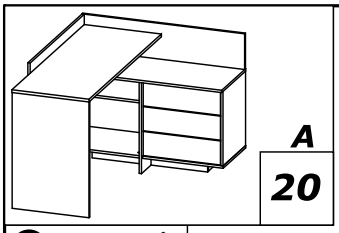

A

20

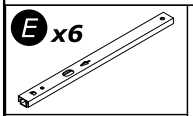

E x6

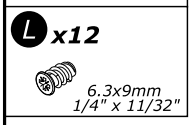

L x12

6.3x9mm
1/4" x 11/32"

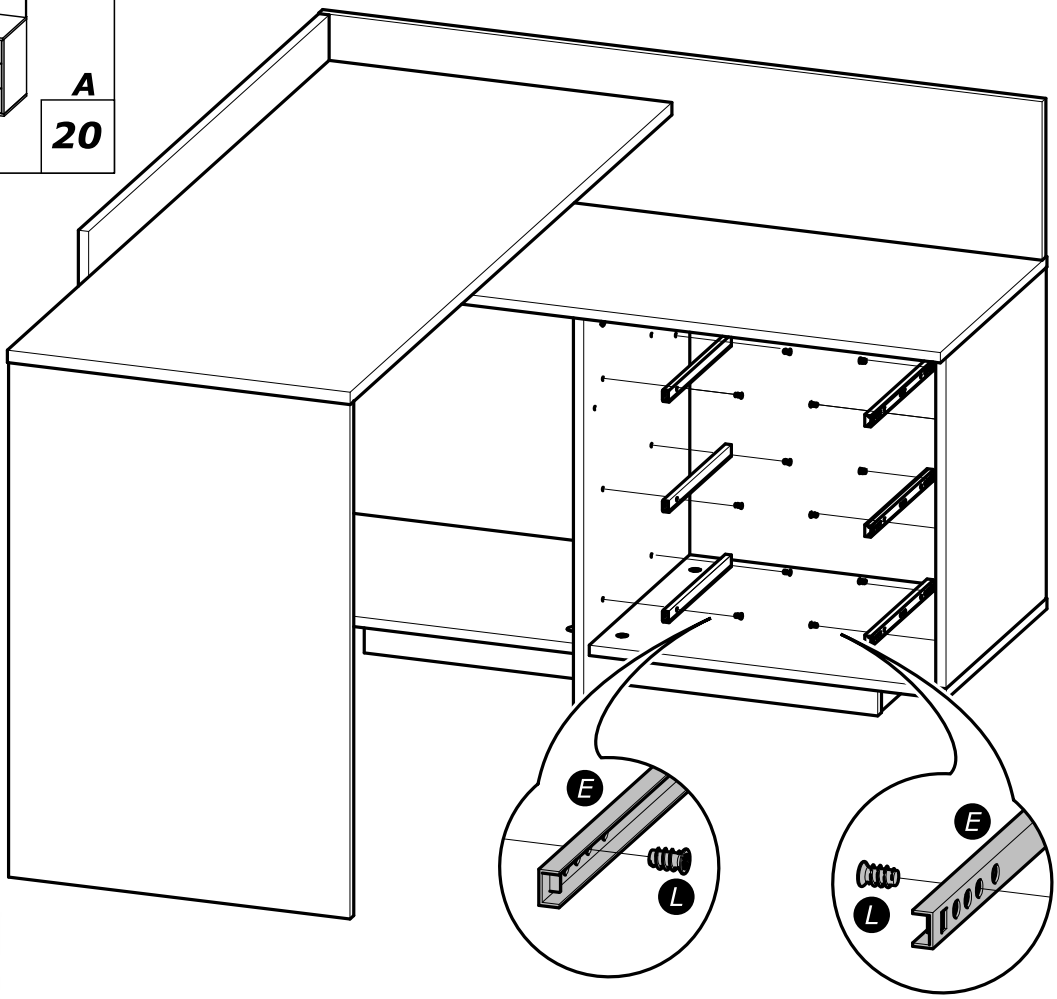

www.Demeyere.fr

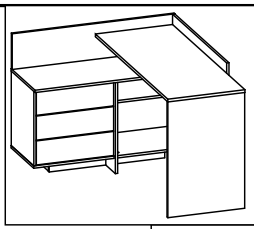

B

20

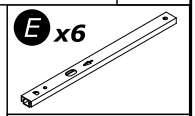

E x6

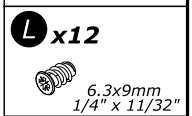

L x12

6.3x9mm
1/4" x 11/32"

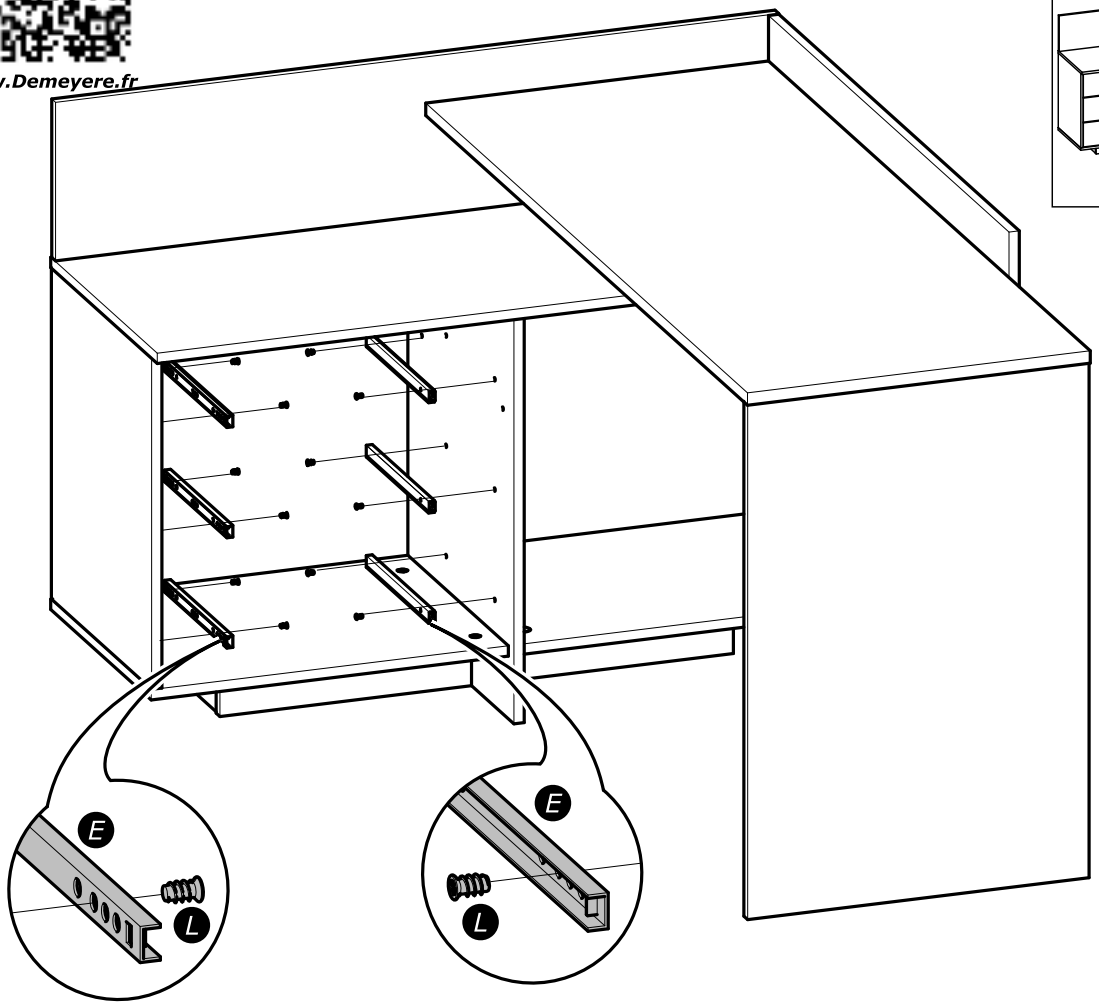

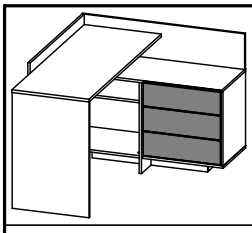

A&B

21

A x6

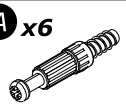

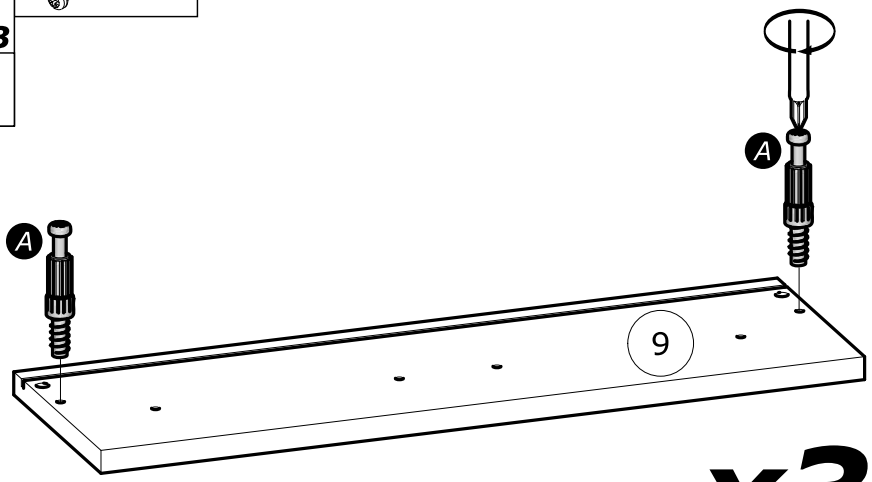

x3

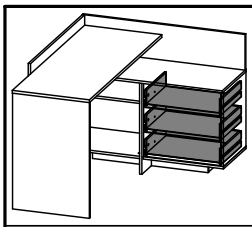

A&B

22

V x6

Ø12mm
Ø15/32"

x3

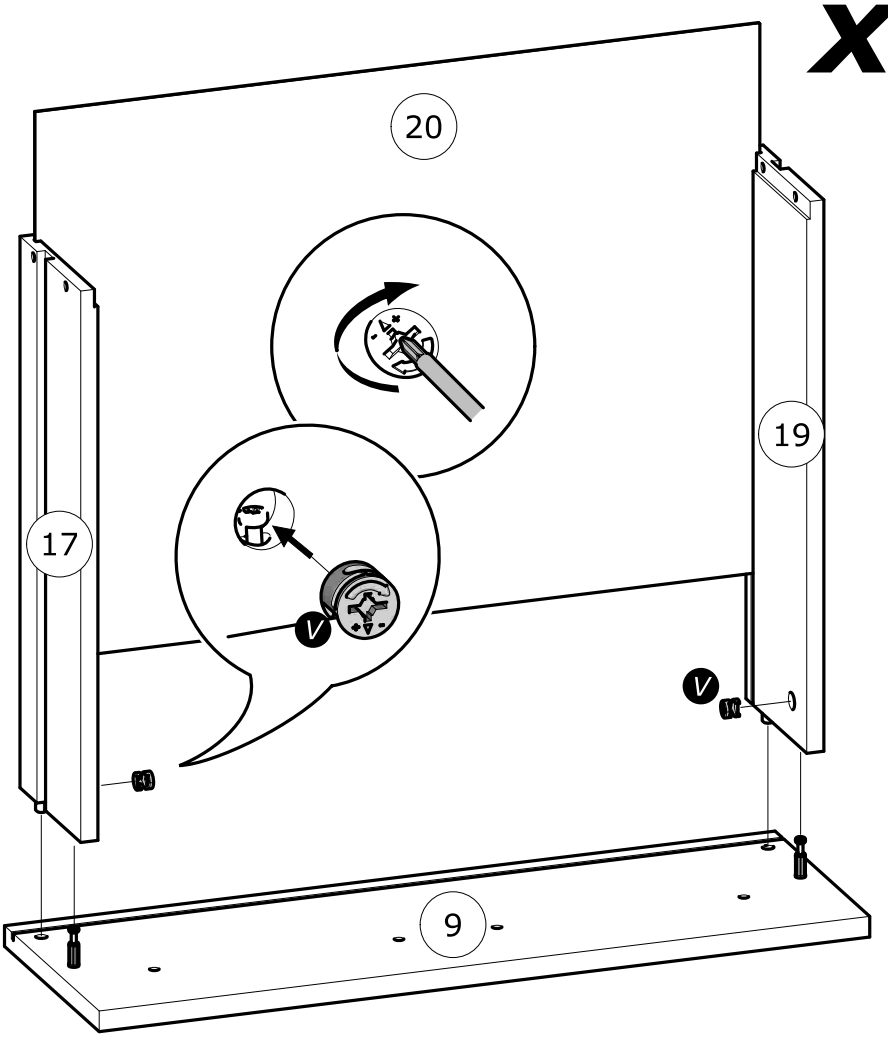

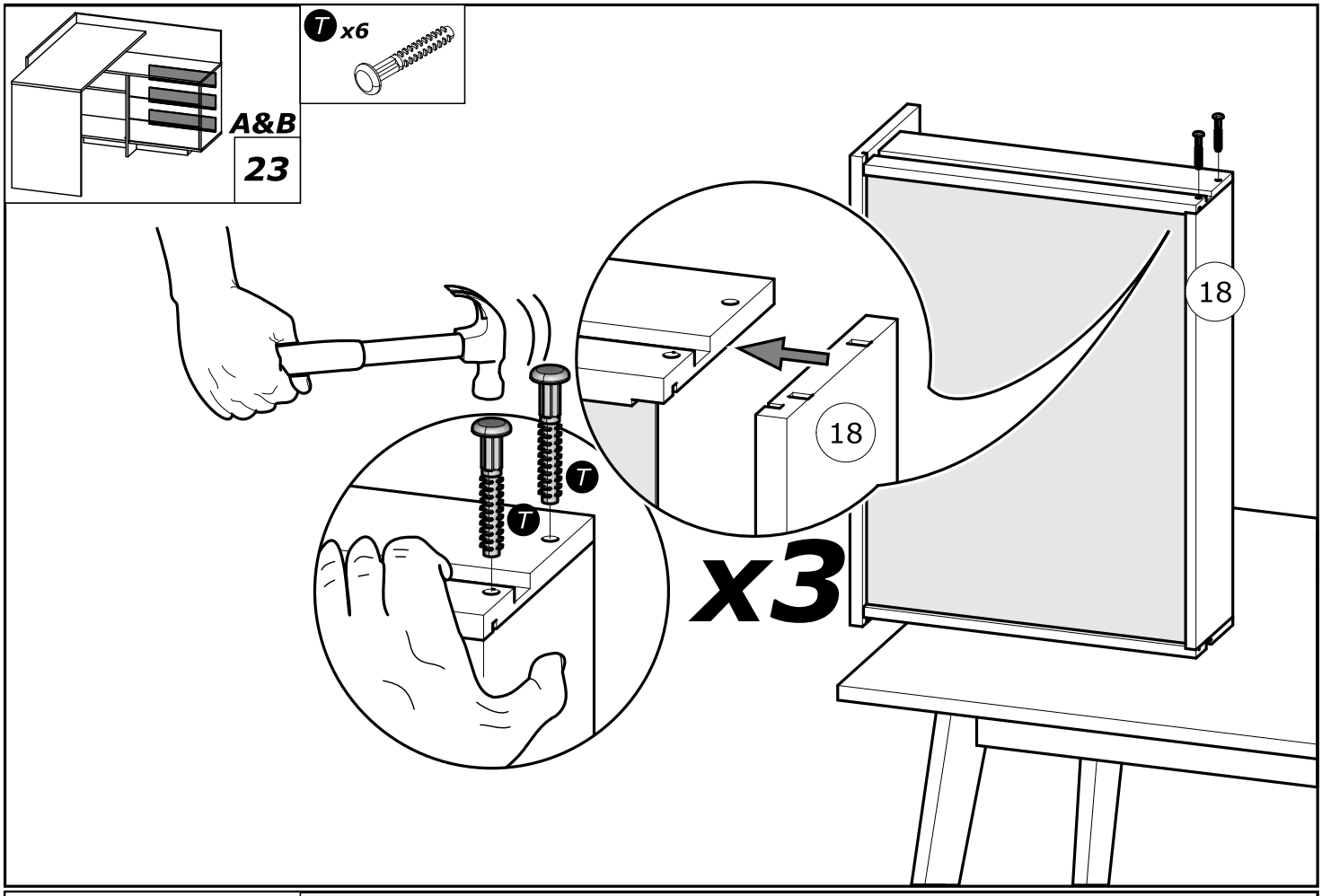
T x6
A&B
23
18
18
T
T
x3

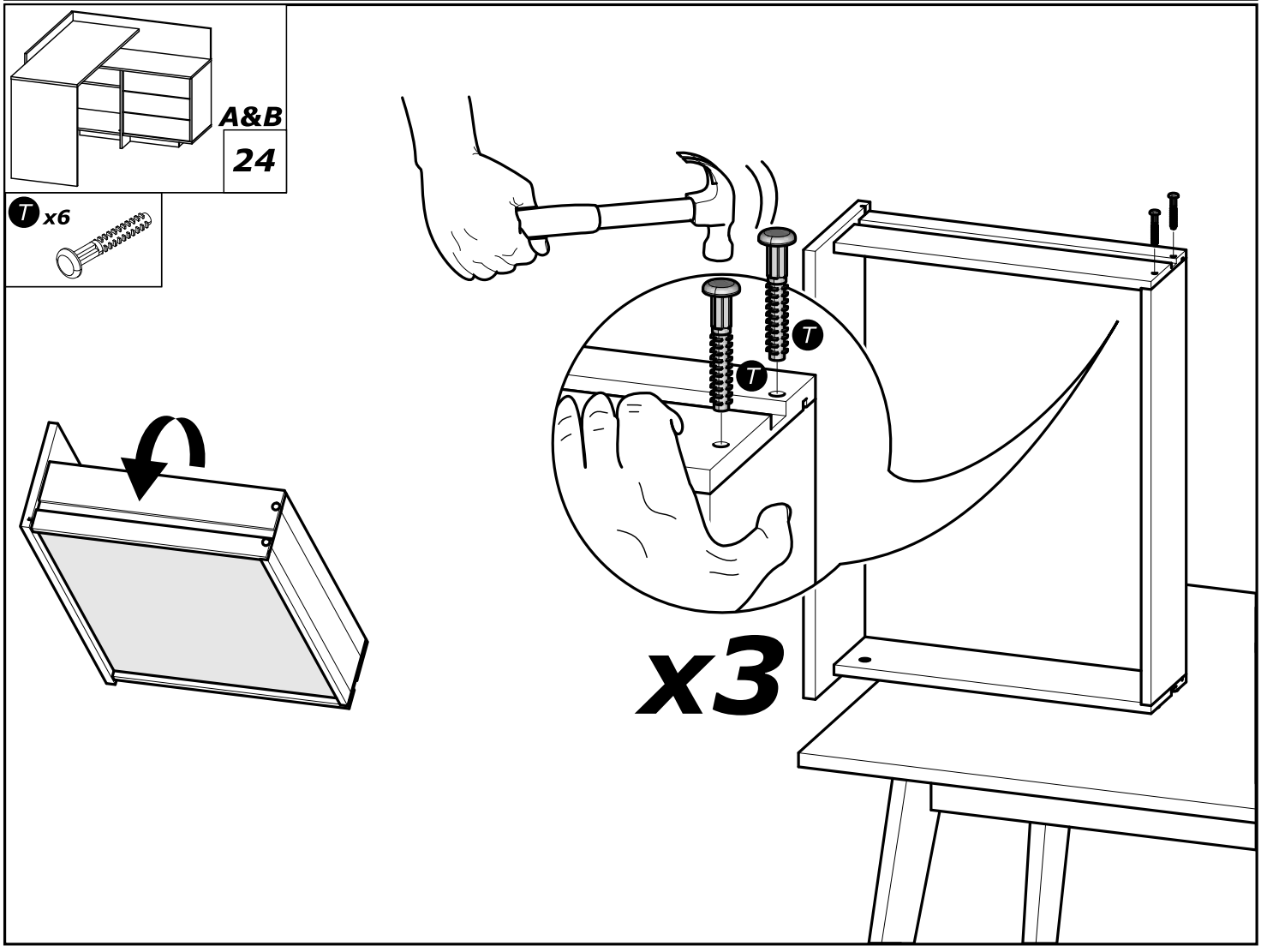
A&B
24
T x6
T
T
x3

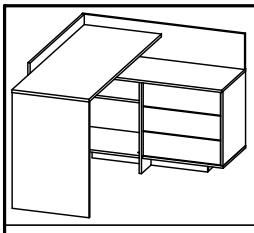

A

25

K x6

4x30mm
5/32" x 1 3/16"

W x3

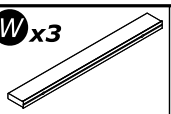

x3

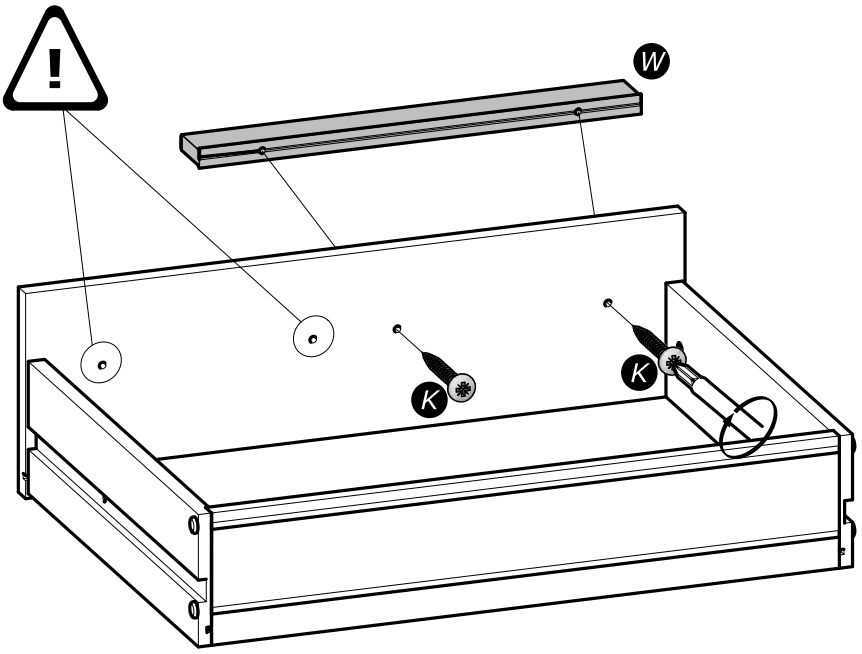

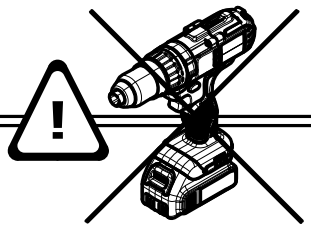

www.Demeyere.fr

K x6

4x30mm
5/32" x 1 3/16"

W x3

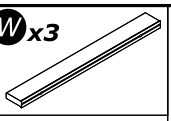

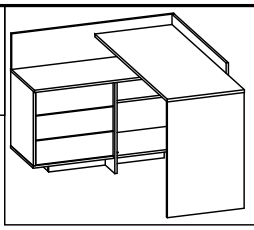

B

25

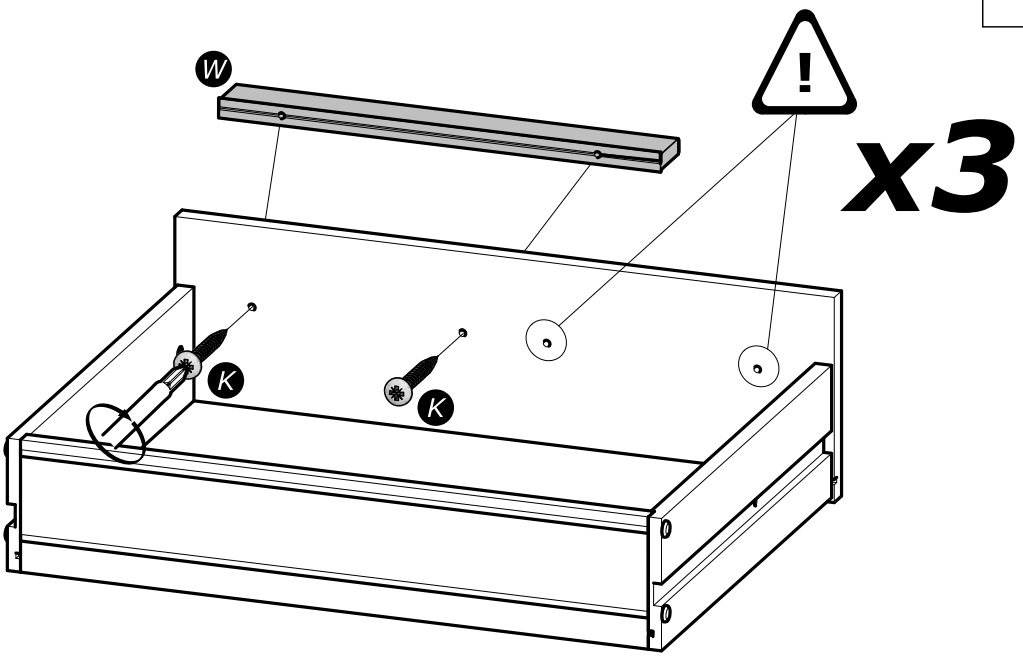

x3

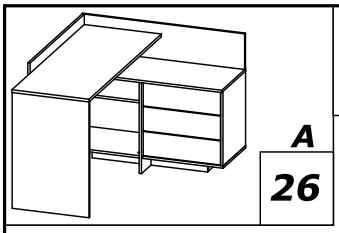

A

26

N x6

4x9mm
5/32" x 11/32"

www.Demeyere.fr

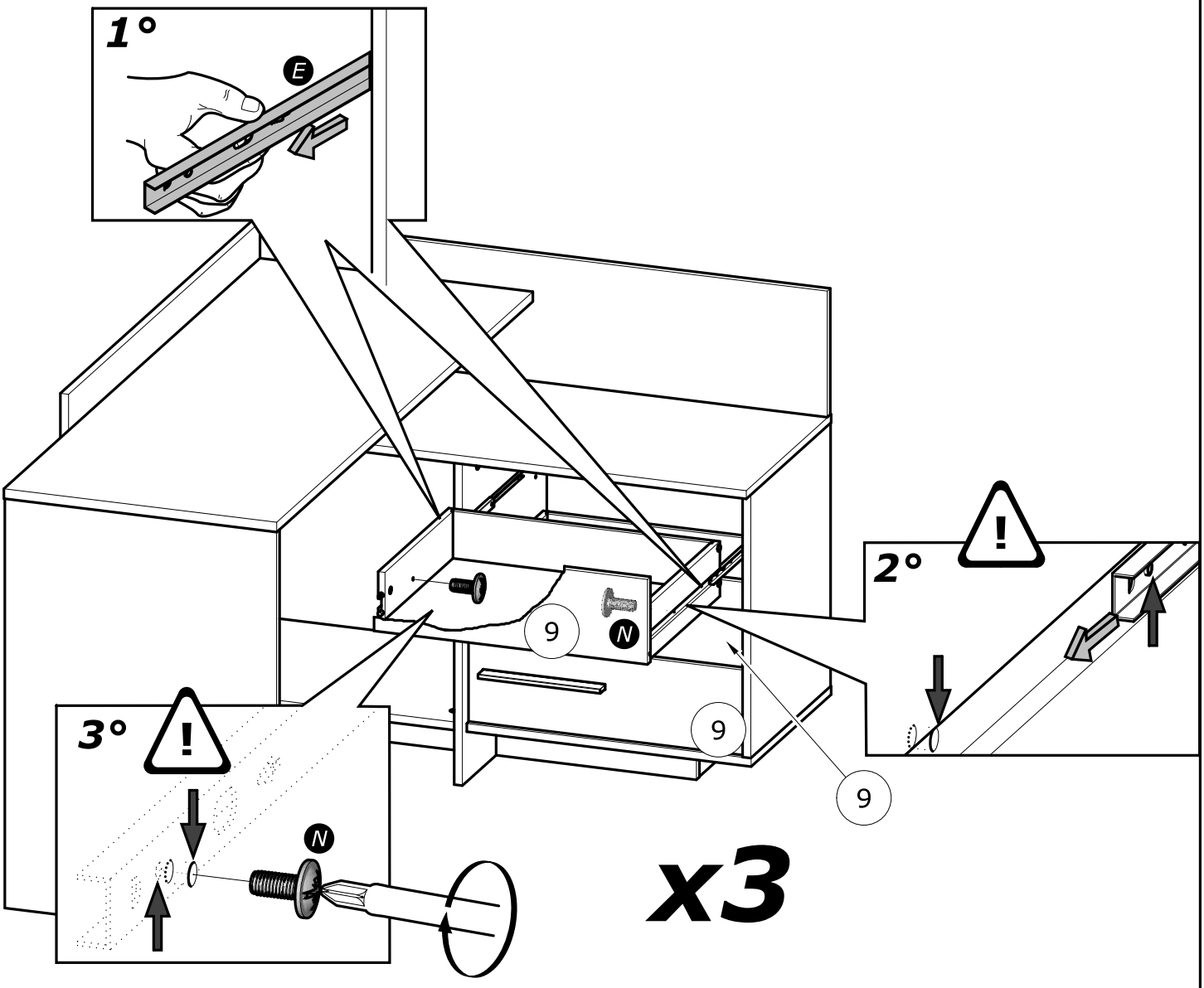

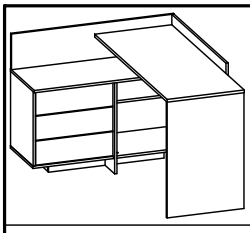

B

26

N x6

4x9mm
5/32" x 11/32"

www.Demeyere.fr

1°

E

2°

N

3°

N

x3

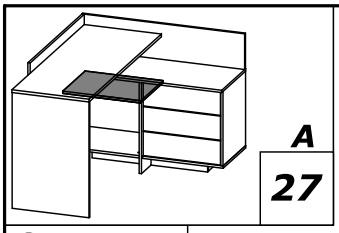

A

27

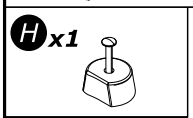

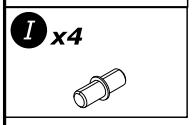

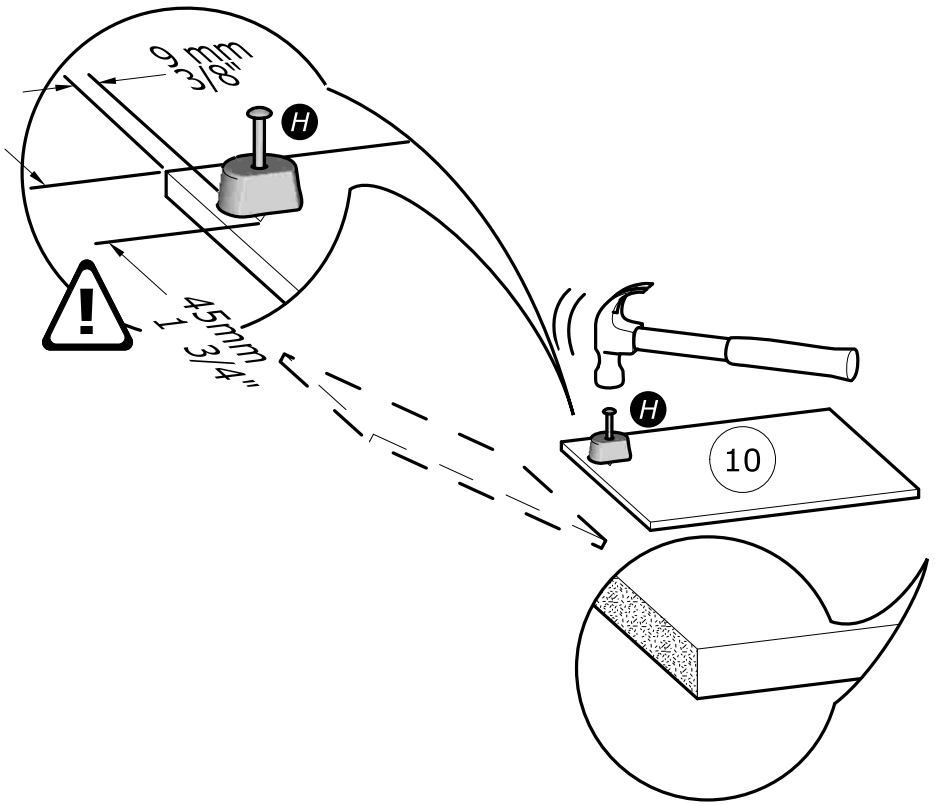

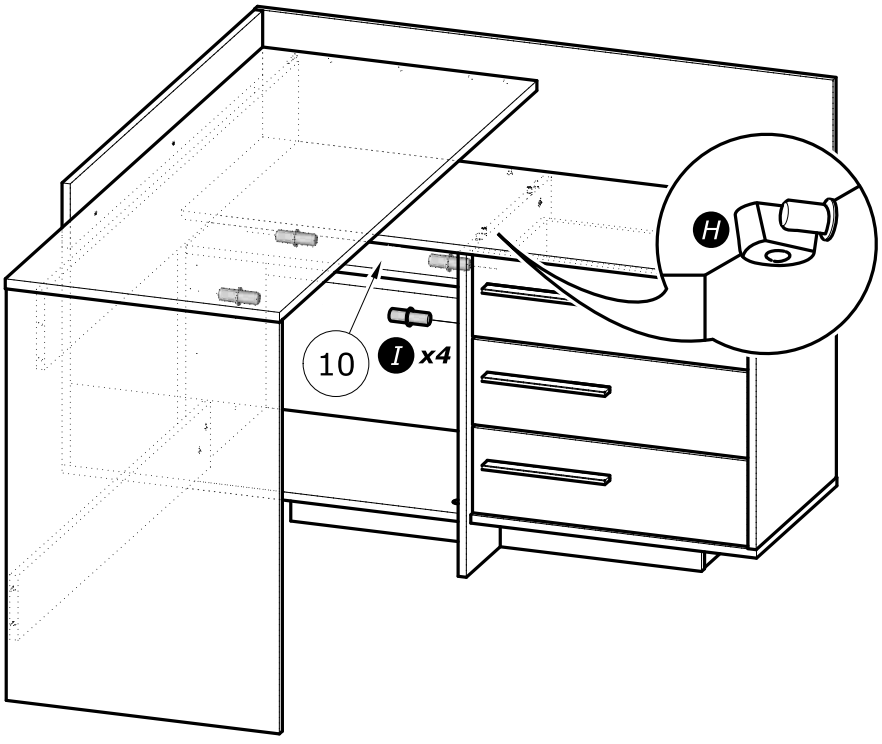

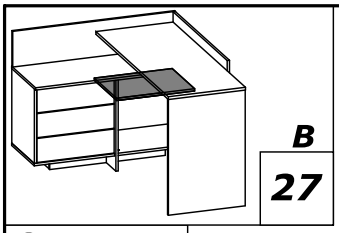

B

27

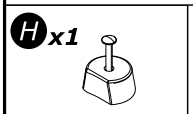

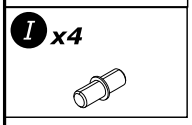

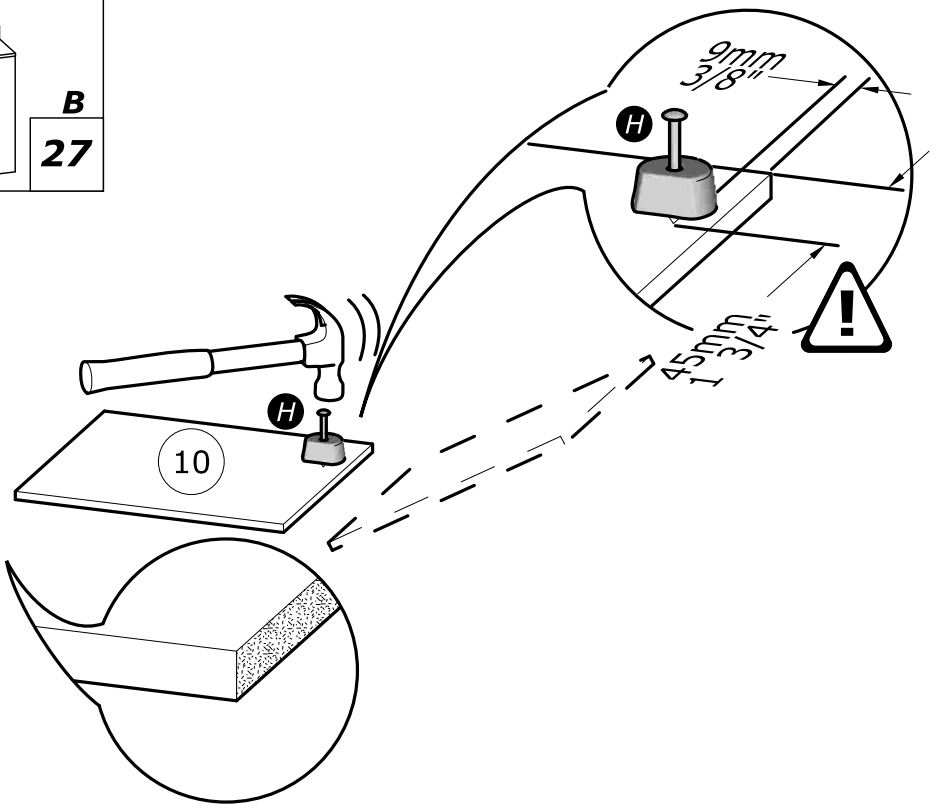

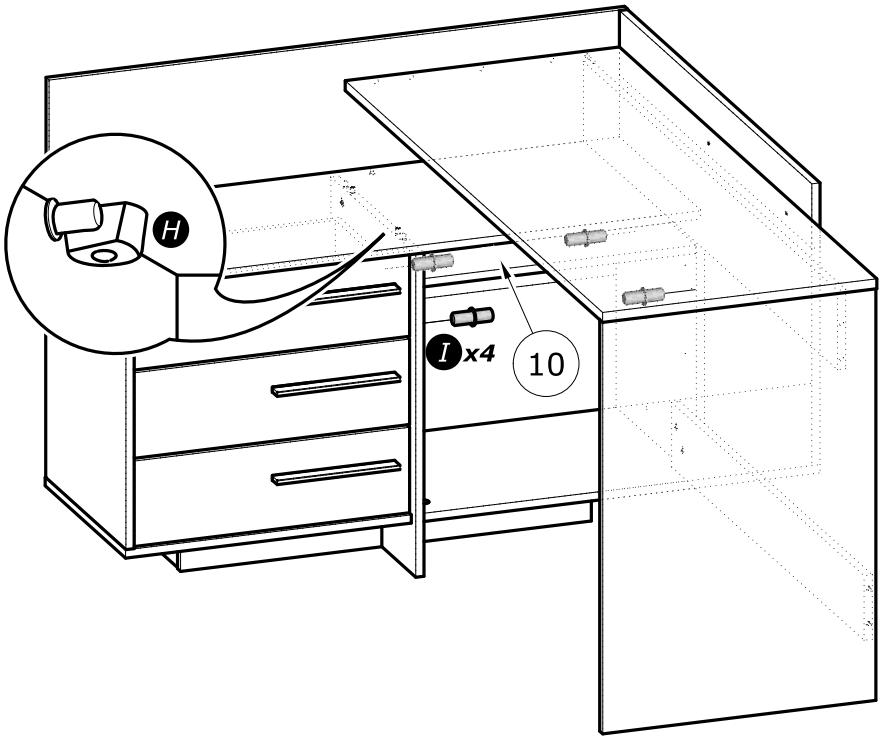

Info tri déchets

www.quefairedemesdechets.fr